IHF Women's Youth (18) World Championship

North Macedonia (Skopje)

Final Round, 9-10. place

Match Team Statistics

Match No. 99

Germany 24 - 32 Norway

(15 - 18) (9 - 14)

8.8.2022. 14:00

Attendance: 60

Sport Centre Boris Trajkovski

Referees: Achraf El Mouniri (MAR) / Mohamed Chouraki (MAR)

Germany

Players			Goals / shots									Attack					Def.			Penalties				TP
#	Surname and name	S	Tot.	%	9m	6m	Wing	7m	FB	Brk.	LD	As.	PC	E7	E2	TF	St.	C7	Blk	YC	2m	R	B	
1	HÜBNER Sarah Sophia																							22:13
3	SCHÖNEFELD Maja		0/2	0					0/1	0/1		1	1				6	1						33:32
5	TERFLOTH Pia Maria		1/3	33			1/3									1								34:36
7	PROBST Magdalena Barbara Leonie		2/2	100		1/1	1/1								1									30:00
8	WOHLFEIL Merja																							12:59
9	KÜHNE Nieke	S	5/10	50	2/6			1/1		2/3			3	1		2	1				1			44:51
10	EHLERT Matilda		0/4	0	0/3			0/1				2	1	1		6	1	1						25:29
11	BIANCO Gianina Estella	S	1/1	100			1/1																	24:38
12	WEISS Marie Kristin	S																						36:26
14	RÖPCKE Lotta	S	1/2	50						1/2		3		1		2	1					1		41:23
15	HÜRKAMP Emy Jane	S	1/3	33			0/1		1/2							1		1						29:52
18	ALBERS Merle Sophie	S	1/2	50		1/2											1							18:07
19	LEUCHTER Viola Charlotte	S	5/11	45	2/6			1/2		2/3		2	3			1	1							18:44
20	PFUNDSTEIN Ariane		5/6	83		3/4			1/1	1/1							1	1	1					28:58
22	WIPPER Tabea		2/3	67						2/3			1	1	1	2								7:20
23	ALBERT Luise		0/2	0	0/1						0/1										1			10:52
	Team / bench																							
	UKUPNO		24/51	47	4/16	5/7	3/6	2/4	2/4	8/13	0/1	8	9	4	2	15	12	4	1	0	2	1	0	

Goalkeepers		Saves / shots								
#.	Surname and name	Tot.	%	9m	6m	Wing	7m	FB	Brk.	LD
1	HÜBNER Sarah Sophia	2/18	11	0/2	0/2	0/3	0/3	0/2	2/6	
12	WEISS Marie Kristin	4/19	21	1/4		1/5	0/2	0/1	2/7	
	TOTAL	6/37	16	1/6	0/2	1/8	0/5	0/3	4/13	0/0

Coach: **Eugenius Smits**

Number of attacks: 63, Efficiency: 38%, Average Duration: 25.18 seconds

Attack by type of defense

	Shots	9m	6m	Wing	TF	E7	E2
On def. 6-0	20/42	4/16	5/7	3/6	15	4	2
Fastbreak	2/4				0	0	0

Defense by type

	Total	9m	6m	Wing	Stl.	C7	2m
Def. 6-0	23/37	5/9	2/2	7/10	12	4	2
Fastbreak	3/3				0	0	0

Attack with superiority / minority / goalkeeper out

	Attack				Reaction		
	Att.	Eff.	Shots	TF	FB	LD	Tot.
7 on 6 (GK out)	1	0%	0/0	1	0/0	0/0	0/0
6 on 6 (GK out)	4	25%	1/1	3	1/1	1/1	2/2
6 on 6	51	39%	20/41	10			
6 on 5	5	40%	2/4	1			
5 on 6	1	0%	0/1	0			
5 on 5	1	100%	1/1	0			

Player superiority / GK out counted at the end of attack (in case it changes during attack)

Defense with superiority / minority / goalkeeper out

	Attack				Reaction		
	Att.	Eff.	Shots	TF	FB	LD	Tot.
6 on 6 (GK out)	1	0%	0/0	1	0/0	0/0	0/0
6 on 6	52	50%	26/36	16			
5 on 6	3	33%	1/2	1			
6 on 5 (GK out)	1	100%	1/1	0	0/0	0/0	0/0
6 on 5	4	100%	4/4	0			
5 on 5	1	0%	0/0	1			

Numbers show attacking numbers of oponnent. Lower efficiency of oponnent means better defense of this team

#	Jersey number	**Tot.**	Total shooting	**6m**	6m (line) shooting	**9m**	9m shooting	**Wng**	Wing shooting	**FB**	Fastbreak sh.	**7m**	7m penalty sh.
Brk.	Breakthrough sh.	**LD**	Long distance sh.	**As.**	Assists	**PC**	Pass clear chance	**E7**	Eearned 7m pen.	**TF**	Technical faults	**St.**	Steals
2m	2m punishments	**C7.**	Commited 7m	**E2**	Eearned 2m pun.	**YC.**	Yellow cards	**R/B**	Red/Blue cards	**Blk.**	Blocks	**S**	Starting Line-up

IHF Women's Youth (18) World Championship

North Macedonia (Skopje)

Final Round, 9-10. place

Match Team Statistics

Match No. 99

Germany 24 - 32 Norway

(15 - 18) (9 - 14)

8.8.2022. 14:00
Attendance: 60
Sport Centre Boris Trajkovski

Referees: Achraf El Mouniri (MAR) / Mohamed Chouraki (MAR)

Shot distribution by player

3 M. Schönefeld

		0/1

1 miss.

5 P. Terfloth

	0/1	
1/1	0/1	

7 M. Probst

		2/2

8 M. Wohlfeil

9 N. Kühne

	1/1	
1/1	0/1	2/2
		1/1

1 post 3 miss.

10 M. Ehlert

0/1		

1 post 2 miss.

11 G. Bianco

1/1		

14 L. Röpcke

	0/1	1/1

15 E. Hürkamp

	0/1	1/1
	0/1	

18 M. Albers

		1/1

1 miss.

19 V. Leuchter

1/2		1/1
2/3		
1/1	0/1	

3 miss.

20 A. Pfundstein

3/3		1/1
		1/1

1 miss.

22 T. Wipper

		1/1
1/1		

1 miss.

23 L. Albert

1 post 1 miss.

TOTAL

1/3	1/2	2/2
7/8	0/4	6/7
3/3	0/2	4/4

3 post 13 miss.

Saves distribution goalkeepers

1 S. Hübner

0/1		0/2
2/8	0/1	0/1
0/4		0/2

12 M. Weiss

0/1		0/2
2/6	1/1	0/3
1/1		0/5

TOTAL

0/2		0/4
4/14	1/2	0/4
1/5		0/7

Shots by position

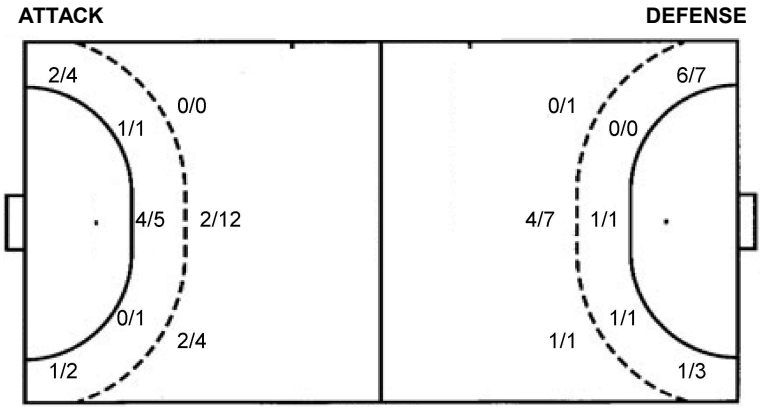

7m penalties	2/4	7m penalties	5/5
Fastbreak	2/4	Fastbreak	3/3
Breakthrough	8/13	Breakthrough	9/16
Long dist.	0/1	Long dist.	1/1

Shooting statistics

Position	Goals	Sav.	Miss.	Post	Blk.	Total	%
Back (9m)	4	4	6	2	0	16	25
Line (6m)	5	0	2	0	0	7	71
Wing	3	3	0	0	0	6	50
7m penalties	2	1	0	1	0	4	50
Fastbreak	2	1	1	0	0	4	50
Breakthrough	8	2	3	0	0	13	62
Total	**24**	**11**	**12**	**3**	**0**	**50**	**48**

#	Jersey number	**Tot.**	Total shooting	**6m**	6m (line) shooting	**9m**	9m shooting	**Wng**	Wing shooting	**FB**	Fastbreak sh.	**7m**	7m penalty sh.
Brk.	Breakthrough sh.	**LD**	Long distance sh.	**As.**	Assists	**PC**	Pass clear chance	**E7**	Eearned 7m pen.	**TF**	Technical faults	**St.**	Steals
2m	2m punishments	**C7.**	Commited 7m	**E2**	Eearned 2m pun.	**YC.**	Yellow cards	**R/B**	Red/Blue cards	**Blk.**	Blocks	**S**	Starting Line-up

IHF Women's Youth (18) World Championship

North Macedonia (Skopje)

Final Round, 9-10. place

Match Team Statistics

Match No. 99

Germany 24 - 32 Norway

(15 - 18) (9 - 14)

8.8.2022. 14:00

Attendance: 60

Sport Centre Boris Trajkovski

Referees: Achraf El Mouniri (MAR) / Mohamed Chouraki (MAR)

Norway

Players			Goals / shots									Attack					Def.			Penalties				TP
#	Surname and name	S	Tot.	%	9m	6m	Wing	7m	FB	Brk.	LD	As.	PC	E7	E2	TF	St.	C7	Blk	YC	2m	R	B	
1	MARDALEN Kadija	S																						50:45
2	MONNÉ Ingeborg Storbak	S	4/6	67			4/5			0/1		2				1								35:42
3	JULLUMSTRO Nicoline	S	0/1	0			0/1					1												28:29
5	HEDENSTAD Constance	S	6/8	75	3/3					3/5			1	2		4		1			1			43:48
6	ENGER Mathea		1/3	33						1/3		2	1	1	1	2								36:53
8	KAMBRUCE Selin		3/3	100			2/2		1/1			1				1								23:53
9	KYRKJEEIDE Linnea Skadal		1/2	50			1/2																	31:31
11	GRASDAL Maria Elisabeth	S	2/2	100					2/2							1								40:09
12	FRISENDAL Dina																							0:29
20	MJOS Marie	S	3/4	75	0/1					3/3		1	1		1	4		1			1			25:15
24	KVARME Mia		0/2	0						0/2				1				1						15:59
25	GISKE Viktoria		1/1	100		1/1										1		1						18:54
26	ROSENBERG Nora Evelina Cecilia	S	11/12	92	2/3	1/1		5/5		2/2	1/1	5	2			3	1							39:18
28	MALESEVIC Anna Janicijevic															1								6:34
33	HONNINGSTAD Edle Christine		0/2	0	0/2											1					1			22:21
	Team / bench																							
	UKUPNO		32/46	70	5/9	2/2	7/10	5/5	3/3	9/16	1/1	12	5	4	2	19	1	4	0	0	3	0	0	

Goalkeepers		Saves / shots								
#.	Surname and name	Tot.	%	9m	6m	Wing	7m	FB	Brk.	LD
1	MARDALEN Kadija	8/29	28	4/8	0/4	2/5	0/1	1/3	1/8	
12	FRISENDAL Dina	1/1	100				1/1			
28	MALESEVIC Anna Janicijevic	2/5	40		0/1	1/1	0/1		1/2	
	TOTAL	11/35	31	4/8	0/5	3/6	1/3	1/3	2/10	0/0

Coach: **Kristine Lunde-Borgersen**

Number of attacks: 62, Efficiency: 52%, Average Duration: 33.84 seconds

Attack by type of defense

	Shots	9m	6m	Wing	TF	E7	E2
On def. 6-0	23/37	5/9	2/2	7/10	19	4	2
Fastbreak	3/3				0	0	0

Defense by type

	Total	9m	6m	Wing	Stl.	C7	2m
Def. 6-0	20/42	4/16	5/7	3/6	1	4	3
Fastbreak	2/4				0	0	0

Attack with superiority / minority / goalkeeper out

	Attack				Reaction		
	Att.	Eff.	Shots	TF	FB	LD	Tot.
6 on 6 (GK out)	1	0%	0/0	1	0/0	0/0	0/0
6 on 6	52	50%	26/36	16			
5 on 6	3	33%	1/2	1			
6 on 5 (GK out)	1	100%	1/1	0	0/0	0/0	0/0
6 on 5	4	100%	4/4	0			
5 on 5	1	0%	0/0	1			

Player superiority / GK out counted at the end of attack (in case it changes during attack)

Defense with superiority / minority / goalkeeper out

	Attack				Reaction		
	Att.	Eff.	Shots	TF	FB	LD	Tot.
7 on 6 (GK out)	1	0%	0/0	1	0/0	0/0	0/0
6 on 6 (GK out)	4	25%	1/1	3	1/1	1/1	2/2
6 on 6	51	39%	20/41	10			
6 on 5	5	40%	2/4	1			
5 on 6	1	0%	0/1	0			
5 on 5	1	100%	1/1	0			

Numbers show attacking numbers of oponnent. Lower efficiency of oponnent means better defense of this team

#	Jersey number	**Tot.**	Total shooting	**6m**	6m (line) shooting	**9m**	9m shooting	**Wng**	Wing shooting	**FB**	Fastbreak sh.	**7m**	7m penalty sh.
Brk.	Breakthrough sh.	**LD**	Long distance sh.	**As.**	Assists	**PC**	Pass clear chance	**E7**	Eearned 7m pen.	**TF**	Technical faults	**St.**	Steals
2m	2m punishments	**C7.**	Commited 7m	**E2**	Eearned 2m pun.	**YC.**	Yellow cards	**R/B**	Red/Blue cards	**Blk.**	Blocks	**S**	Starting Line-up

IHF Women's Youth (18) World Championship

North Macedonia (Skopje)

Final Round, 9-10. place

Match Team Statistics

Match No. 99

Germany 24 - 32 Norway

(15 - 18) (9 - 14)

8.8.2022. 14:00

Attendance: 60

Sport Centre Boris Trajkovski

Referees: Achraf El Mouniri (MAR) / Mohamed Chouraki (MAR)

Shot distribution by player

2 I. Monné

1/1		
1/2		1/1
0/1		1/1

3 N. Jullumstro

1 miss.

5 C. Hedenstad

1/1		
4/5	0/1	1/1

6 M. Enger

0/1		1/1

1 post

8 S. Kambruce

1/1		
		2/2

9 L. Kyrkjeeide

1/1		

1 miss.

11 M. Grasdal

1/1		1/1

20 M. Mjos

		2/2
1/1		

1 post

24 M. Kvarme

2 post

25 V. Giske

1/1		

26 N. Rosenberg

		2/2
2/2	1/1	
2/2		4/4

1 block

33 E. Honningstad

0/1		

1 miss.

TOTAL

2/2		4/4
10/14	1/2	4/4
4/5		7/7

4 post 3 miss. 1 block

Saves distribution goalkeepers

1 K. Mardalen

2/3	0/1	0/1
1/8	4/4	0/5
0/3	1/1	0/3

12 D. Frisendal

	1/1	

28 A. Malesevic

	1/1	0/1
		1/2
		0/1

TOTAL

2/3	1/2	0/2
1/8	4/4	1/7
0/3	2/2	0/4

Shots by position

ATTACK

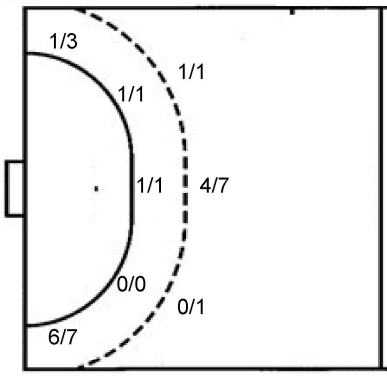

7m penalties	5/5
Fastbreak	3/3
Breakthrough	9/16
Long dist.	1/1

DEFENSE

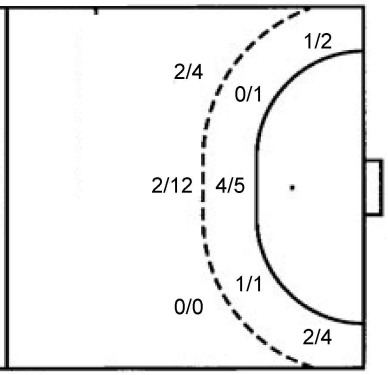

7m penalties	2/4
Fastbreak	2/4
Breakthrough	8/13
Long dist.	0/1

Shooting statistics

Position	Goals	Sav.	Miss.	Post	Blk.	Total	%
Back (9m)	5	1	1	1	1	9	56
Line (6m)	2	0	0	0	0	2	100
Wing	7	1	2	0	0	10	70
7m penalties	5	0	0	0	0	5	100
Fastbreak	3	0	0	0	0	3	100
Breakthrough	9	4	0	3	0	16	56
Total	**31**	**6**	**3**	**4**	**1**	**45**	**69**

#	Jersey number	**Tot.**	Total shooting	**6m**	6m (line) shooting	**9m**	9m shooting	**Wng**	Wing shooting	**FB**	Fastbreak sh.	**7m**	7m penalty sh.
Brk.	Breakthrough sh.	**LD**	Long distance sh.	**As.**	Assists	**PC**	Pass clear chance	**E7**	Eearned 7m pen.	**TF**	Technical faults	**St.**	Steals
2m	2m punishments	**C7.**	Commited 7m	**E2**	Eearned 2m pun.	**YC.**	Yellow cards	**R/B**	Red/Blue cards	**Blk.**	Blocks	**S**	Starting Line-up

IHF Women's Youth (18) World Championship

North Macedonia (Skopje)

Final Round, 9-10. place

Match Team Statistics

Match No. 99

Germany 24 - 32 Norway

(15 - 18) (9 - 14)

8.8.2022. 14:00

Attendance: 60

Sport Centre Boris Trajkovski

Referees: Achraf El Mouniri (MAR) / Mohamed Chouraki (MAR)

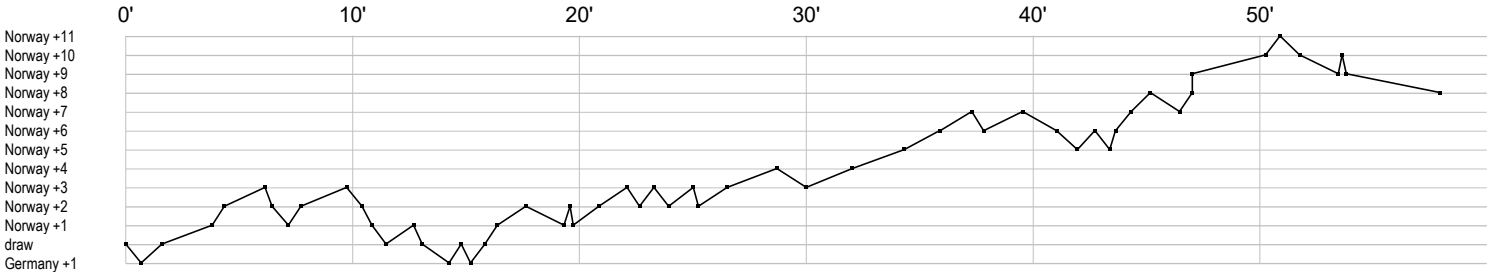

Germany

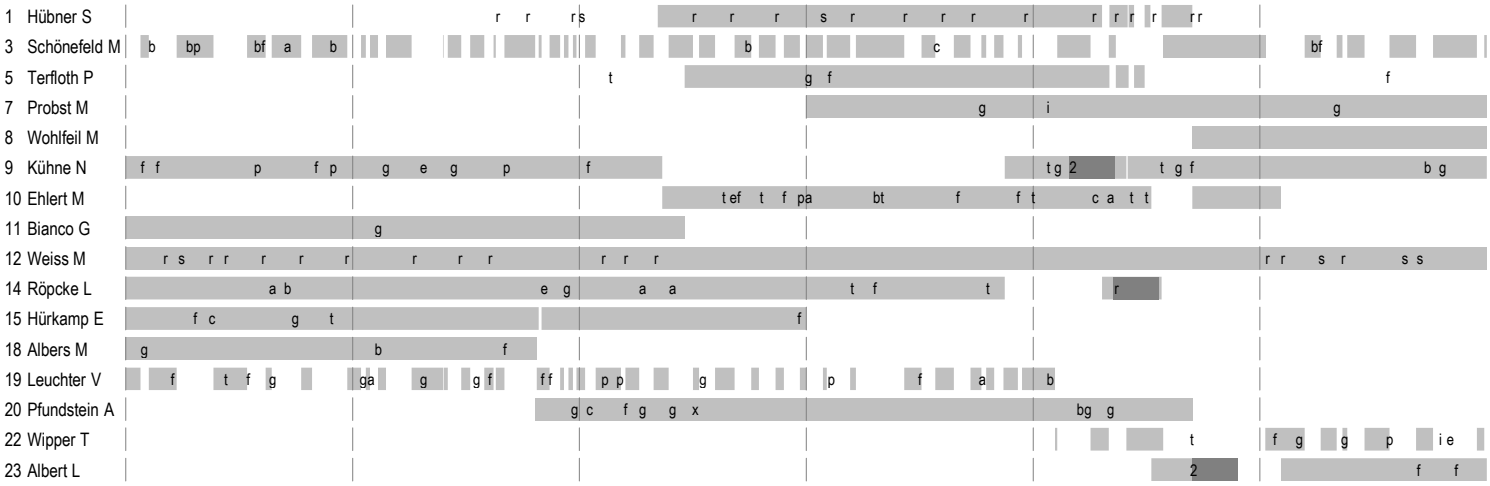

Norway

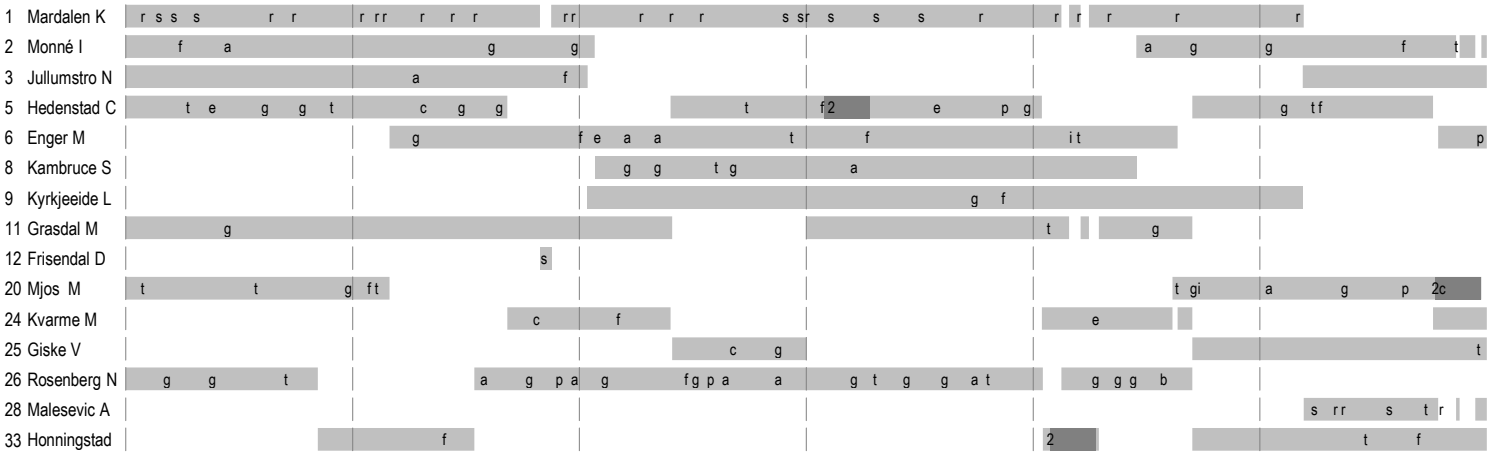

	In game	**g**	Goal scored	**f**	Missed shot	**a**	Assist	**t**	Technical faults	**b**	Steal
2	2min suspension	**e**	Eearned 7m	**c**	Commited 7m	**y**	Yellow card	**r**	Red Card	**k**	Blue card
i	Eearned 2min.	**x**	Block	**4**	4min suspension	**p**	Pass for clear chance	**s**	Saved shot	**r**	Received goal