IHF Women's Youth (18) World Championship

North Macedonia (Skopje)

Main Round IV, 1. round

Match Team Statistics

Match No. 64

Hungary 32 - 16 Brazil

(19 - 10) (13 - 6)

4.8.2022. 20:30

Attendance: 50

Sport Centre Jane Sandanski

Referees: Georgi Doychinov (BUL) / Yulian Goretsov (BUL)

Hungary

Players			Goals / shots									Attack					Def.			Penalties				TP
#	Surname and name	S	Tot.	%	9m	6m	Wing	7m	FB	Brk.	LD	As.	PC	E7	E2	TF	St.	C7	Blk	YC	2m	R	B	
5	CSÍKOS Luca		2/4	50	1/2					1/2						3								37:33
7	SIMON Petra	S	3/4	75						3/4		1	1											18:25
8	JUHÁSZ Kata		1/2	50		1/2													1					25:23
9	IMRE Szofi																							
15	SASS Kincső	S										1				1								33:38
17	PANYI Anna		3/4	75	1/2					2/2		1	1			2		2						40:13
18	CSERNYÁNSZKI Liliána	S	2/2	100		1/1				1/1		4	1	1	1	1		1			1			30:00
21	KISS Csenge		2/3	67			1/2		1/1															30:00
22	BUCSI Lili		1/4	25	0/1		0/1		1/1	0/1						1								32:30
28	ZAJ Klára															2								19:43
36	SZABÓ Lili	S	2/2	100		2/2						1					1							26:36
50	KÁRMÁN Luca		1/5	20	0/2	0/2			1/1			2					2		3					17:11
67	MOLNÁR Dorottya	S	2/3	67			2/3									1								25:13
81	FARKAS Júlia	S	4/5	80	0/1	1/1		1/1		2/2		1	1			1								18:08
96	KOVALCSIK Bianka		5/7	71		1/1			1/1	3/5		3	2		1	2	2	1						35:27
99	SZABÓ Anna	S	4/4	100			2/2		2/2															30:00
	Team / bench																							
	UKUPNO		32/49	65	2/8	6/9	5/8	1/1	6/6	12/17	0/0	14	6	1	2	14	5	4	4	0	1	0	0	

Goalkeepers		Saves / shots								
#.	Surname and name	Tot.	%	9m	6m	Wing	7m	FB	Brk.	LD
9	IMRE Szofi									
15	SASS Kincső	10/23	43	6/12	1/1	0/2	0/3	1/2	2/3	
28	ZAJ Klára	8/11	73	6/7	0/2	1/1	1/1			
	TOTAL	18/34	53	12/19	1/3	1/3	1/4	1/2	2/3	0/0

Coach: **Beáta Bohus**

Number of attacks: 60, Efficiency: 53%, Average Duration: 28.34 seconds

Attack by type of defense

	Shots	9m	6m	Wing	TF	E7	E2
On def. 6-0	8/10	1/2	0/0	3/3	5	0	0
On def. 5-1	6/18	1/5	2/5	0/2	7	0	1
On def. 4-2	11/14	0/1	4/4	2/3	2	1	1
Fastbreak	6/6				0	0	0

Defense by type

	Total	9m	6m	Wing	Stl.	C7	2m
Def. 6-0	6/13	4/8	0/0	2/4	0	0	0
Def. 5-1	6/29	3/19	2/4	0/3	5	4	1
Fastbreak	1/2				0	0	0

Attack with superiority / minority / goalkeeper out

	Attack				Reaction		
	Att.	Eff.	Shots	TF	FB	LD	Tot.
6 on 6 (GK out)	2	100%	2/2	0	0/0	0/0	0/0
6 on 6	53	51%	27/40	13			
6 on 5	5	60%	3/4	1			

Player superiority / GK out counted at the end of attack (in case it changes during attack)

Defense with superiority / minority / goalkeeper out

	Attack				Reaction		
	Att.	Eff.	Shots	TF	FB	LD	Tot.
6 on 6	53	26%	14/39	14			
5 on 6	3	33%	1/3	0			
6 on 5	3	33%	1/1	2			

Numbers show attacking numbers of oponnent. Lower efficiency of oponnent means better defense of this team

#	Jersey number	**Tot.**	Total shooting	**6m**	6m (line) shooting	**9m**	9m shooting	**Wng**	Wing shooting	**FB**	Fastbreak sh.	**7m**	7m penalty sh.
Brk.	Breakthrough sh.	**LD**	Long distance sh.	**As.**	Assists	**PC**	Pass clear chance	**E7**	Eearned 7m pen.	**TF**	Technical faults	**St.**	Steals
2m	2m punishments	**C7.**	Commited 7m	**E2**	Eearned 2m pun.	**YC.**	Yellow cards	**R/B**	Red/Blue cards	**Blk.**	Blocks	**S**	Starting Line-up

IHF Women's Youth (18) World Championship

North Macedonia (Skopje)

Main Round IV, 1. round

Match Team Statistics

Match No. 64

Hungary 32 - 16 Brazil

(19 - 10) (13 - 6)

4.8.2022. 20:30

Attendance: 50

Sport Centre Jane Sandanski

Referees: Georgi Doychinov (BUL) / Yulian Goretsov (BUL)

Shot distribution by player

5 L. Csíkos

1/1	0/1	
		1/1

1 post

7 P. Simon

		1/1
0/1		
1/1		1/1

8 K. Juhász

		0/1
		1/1

17 A. Panyi

		1/2
1/1		1/1

18 L. Csernyánszki

1/1		
		1/1

21 C. Kiss

		1/1
		1/1

1 miss.

22 L. Bucsi

0/1		0/1
1/1		

1 post

36 L. Szabó

		1/1
		1/1

50 L. Kármán

0/1		1/1

1 post 2 miss.

67 D. Molnár

2/3		

81 J. Farkas

		2/2
0/1		
		2/2

96 B. Kovalcsik

		1/1
2/2		2/2

2 miss.

99 A. Szabó

		2/2
1/1		

1/1 lob

TOTAL

3/5	0/1	9/11
2/5		2/3
5/5		10/10

3 post 5 miss. 1/1 lob

Saves distribution goalkeepers

9 S. Imre

15 K. Sass

0/3		2/5
3/3		2/2
2/6		1/3

28 K. Zaj

0/1		1/1
6/6		
		1/3

TOTAL

0/4		3/6
9/9		2/2
2/6		2/6

Shots by position

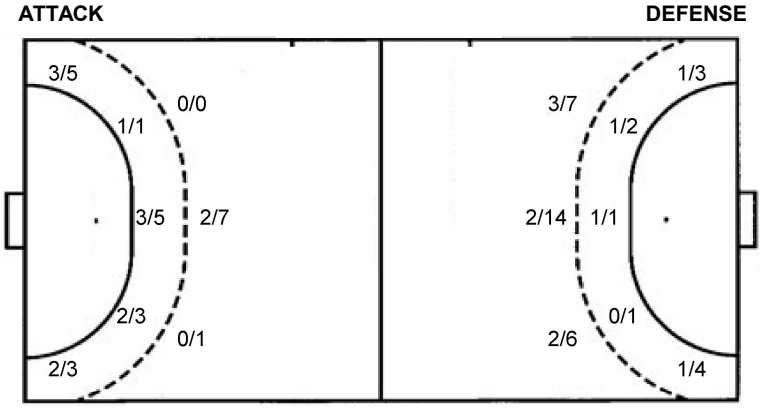

7m penalties	1/1	7m penalties	3/4
Fastbreak	6/6	Fastbreak	1/2
Breakthrough	12/17	Breakthrough	1/4
Long dist.	0/0	Long dist.	0/0

Shooting statistics

Position	Goals	Sav.	Miss.	Post	Blk.	Total	%
Back (9m)	2	4	2	0	0	8	25
Line (6m)	6	2	0	1	0	9	67
Wing	5	1	1	1	0	8	63
7m penalties	1	0	0	0	0	1	100
Fastbreak	6	0	0	0	0	6	100
Breakthrough	12	2	2	1	0	17	71
Total	**32**	**9**	**5**	**3**	**0**	**49**	**65**

#	Jersey number	**Tot.**	Total shooting	**6m**	6m (line) shooting	**9m**	9m shooting	**Wng**	Wing shooting	**FB**	Fastbreak sh.	**7m**	7m penalty sh.
Brk.	Breakthrough sh.	**LD**	Long distance sh.	**As.**	Assists	**PC**	Pass clear chance	**E7**	Eearned 7m pen.	**TF**	Technical faults	**St.**	Steals
2m	2m punishments	**C7.**	Commited 7m	**E2**	Eearned 2m pun.	**YC.**	Yellow cards	**R/B**	Red/Blue cards	**Blk.**	Blocks	**S**	Starting Line-up

IHF Women's Youth (18) World Championship

North Macedonia (Skopje)

Main Round IV, 1. round

Match Team Statistics

Match No. 64

Hungary 32 - 16 Brazil

(19 - 10) (13 - 6)

4.8.2022. 20:30

Attendance: 50

Sport Centre Jane Sandanski

Referees: Georgi Doychinov (BUL) / Yulian Goretsov (BUL)

Brazil

Players			Goals / shots									Attack					Def.			Penalties				TP
#	Surname and name	S	Tot.	%	9m	6m	Wing	7m	FB	Brk.	LD	As.	PC	E7	E2	TF	St.	C7	Blk	YC	2m	R	B	
1	NAVARRO Manuella	S																						23:21
3	RODRIGUES Julia	S	2/3	67	1/2					1/1														27:22
4	JORGE Elisa		0/1	0			0/1																	25:48
5	BORNE Serena		1/4	25			1/4																	19:00
6	DA CRUZ Gabriela		2/4	50		2/4						1					1							13:15
7	ROSA Kelly	S	3/11	27	2/8				1/2	0/1			1	1		2								19:58
8	OLIVEIRA Livia	S														2								21:36
9	DE OLIVEIRA Maria Clara		1/5	20	1/5											2								17:29
10	DOS SANTOS Ana	S	1/2	50			1/2						1			1	1							34:12
13	BORGES Eduarda	S	3/8	38	2/6			1/1		0/1		4	2			2								41:18
14	MACHADO Julia																				1			21:00
15	KAEFER Patricia													1		2		1			1			44:49
18	DA CRUZ Alana															1								7:55
19	SOARES Nathaly		3/7	43	1/4			2/3						1		3								36:55
24	E SILVA Maria Elisa		0/3	0	0/2					0/1			2	1	1	1	3							28:21
99	QUEIROZ Milene	S																						37:41
	Team / bench																							
	UKUPNO		16/48	33	7/27	2/4	2/7	3/4	1/2	1/4	0/0	5	6	4	1	16	5	1	0	0	2	0	0	

Goalkeepers		Saves / shots								
#.	Surname and name	Tot.	%	9m	6m	Wing	7m	FB	Brk.	LD
1	NAVARRO Manuella	3/20	15	1/1	0/4	1/4	0/1	0/2	1/8	
99	QUEIROZ Milene	6/21	29	3/5	2/4	0/2		0/4	1/6	
	TOTAL	9/41	22	4/6	2/8	1/6	0/1	1/6	2/14	0/0

Coach: **Mauricio Antonucci**

Number of attacks: 59, Efficiency: 27%, Average Duration: 34.26 seconds

Attack by type of defense

	Shots	9m	6m	Wing	TF	E7	E2
On def. 6-0	6/13	4/8	0/0	2/4	2	0	0
On def. 5-1	6/29	3/19	2/4	0/3	14	4	1
Fastbreak	1/2				0	0	0

Defense by type

	Total	9m	6m	Wing	Stl.	C7	2m
Def. 6-0	8/10	1/2	0/0	3/3	2	0	0
Def. 5-1	6/18	1/5	2/5	0/2	1	0	1
Def. 4-2	11/14	0/1	4/4	2/3	2	1	1
Fastbreak	6/6				0	0	0

Attack with superiority / minority / goalkeeper out

	Attack				Reaction		
	Att.	Eff.	Shots	TF	FB	LD	Tot.
6 on 6	53	26%	14/39	14			
5 on 6	3	33%	1/3	0			
6 on 5	3	33%	1/1	2			

Player superiority / GK out counted at the end of attack (in case it changes during attack)

Defense with superiority / minority / goalkeeper out

	Attack				Reaction		
	Att.	Eff.	Shots	TF	FB	LD	Tot.
6 on 6 (GK out)	2	100%	2/2	0	0/0	0/0	0/0
6 on 6	53	51%	27/40	13			
6 on 5	5	60%	3/4	1			

Numbers show attacking numbers of oponnent. Lower efficiency of oponnent means better defense of this team

#	Jersey number	**Tot.**	Total shooting	**6m**	6m (line) shooting	**9m**	9m shooting	**Wng**	Wing shooting	**FB**	Fastbreak sh.	**7m**	7m penalty sh.
Brk.	Breakthrough sh.	**LD**	Long distance sh.	**As.**	Assists	**PC**	Pass clear chance	**E7**	Eearned 7m pen.	**TF**	Technical faults	**St.**	Steals
2m	2m punishments	**C7.**	Commited 7m	**E2**	Eearned 2m pun.	**YC.**	Yellow cards	**R/B**	Red/Blue cards	**Blk.**	Blocks	**S**	Starting Line-up

IHF Women's Youth (18) World Championship

North Macedonia (Skopje)

Main Round IV, 1. round

Match Team Statistics

Match No. 64

Hungary 32 - 16 Brazil

(19 - 10) (13 - 6)

4.8.2022. 20:30

Attendance: 50

Sport Centre Jane Sandanski

Referees: Georgi Doychinov (BUL) / Yulian Goretsov (BUL)

Shot distribution by player

3 J. Rodrigues

1/1		0/1
1/1		

4 E. Jorge

1 miss.

5 S. Borne

		1/1

1 post 2 miss.

6 G. Da Cruz

1/1		
0/1		1/1

1 post

7 K. Rosa

1/1		1/2
		0/1
0/1		1/1

2 miss. 3 block

8 L. Oliveira

9 M. De Oliveira

		0/1
		1/2

1 post 1 block

10 A. Dos Santos

0/1		

1/1 lob

13 E. Borges

0/4		0/1
2/2		1/1

14 J. Machado

15 P. Kaefer

18 A. Da Cruz

19 N. Soares

1/1		1/1
0/2		
1/1		

2 miss.

24 M. E Silva

0/2		
		0/1

TOTAL

4/4		3/6
0/9		0/2
4/6		4/6

3 post 7 miss. 4 block 1/1 lob

Saves distribution goalkeepers

1 M. Navarro

1/2		0/6
2/4		0/1
0/1		0/5

99 M. Queiroz

1/3	1/1	2/5
1/1		1/2
0/4		0/5

TOTAL

2/5	1/1	2/11
3/5		1/3
0/5		0/10

Shots by position

ATTACK

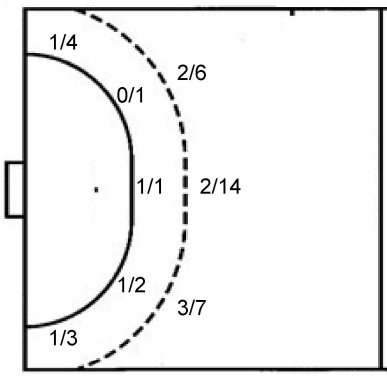

7m penalties	3/4
Fastbreak	1/2
Breakthrough	1/4
Long dist.	0/0

DEFENSE

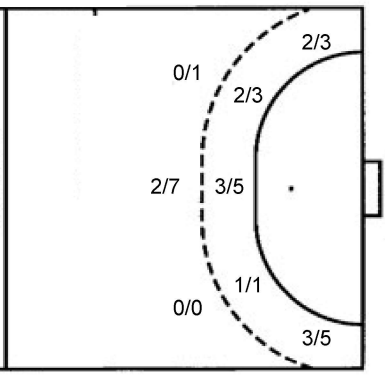

7m penalties	1/1
Fastbreak	6/6
Breakthrough	12/17
Long dist.	0/0

Shooting statistics

Position	Goals	Sav.	Miss.	Post	Blk.	Total	%
Back (9m)	7	12	3	1	4	27	26
Line (6m)	2	1	0	1	0	4	50
Wing	2	1	3	1	0	7	29
7m penalties	3	1	0	0	0	4	75
Fastbreak	1	1	0	0	0	2	50
Breakthrough	1	2	1	0	0	4	25
Total	**16**	**18**	**7**	**3**	**4**	**48**	**33**

#	Jersey number	**Tot.**	Total shooting	**6m**	6m (line) shooting	**9m**	9m shooting	**Wng**	Wing shooting	**FB**	Fastbreak sh.	**7m**	7m penalty sh.
Brk.	Breakthrough sh.	**LD**	Long distance sh.	**As.**	Assists	**PC**	Pass clear chance	**E7**	Eearned 7m pen.	**TF**	Technical faults	**St.**	Steals
2m	2m punishments	**C7.**	Commited 7m	**E2**	Eearned 2m pun.	**YC.**	Yellow cards	**R/B**	Red/Blue cards	**Blk.**	Blocks	**S**	Starting Line-up

IHF Women's Youth (18) World Championship

North Macedonia (Skopje)

Main Round IV, 1. round

Match Team Statistics

Match No. 64

Hungary 32 - 16 Brazil

(19 - 10) (13 - 6)

4.8.2022. 20:30

Attendance: 50

Sport Centre Jane Sandanski

Referees: Georgi Doychinov (BUL) / Yulian Goretsov (BUL)

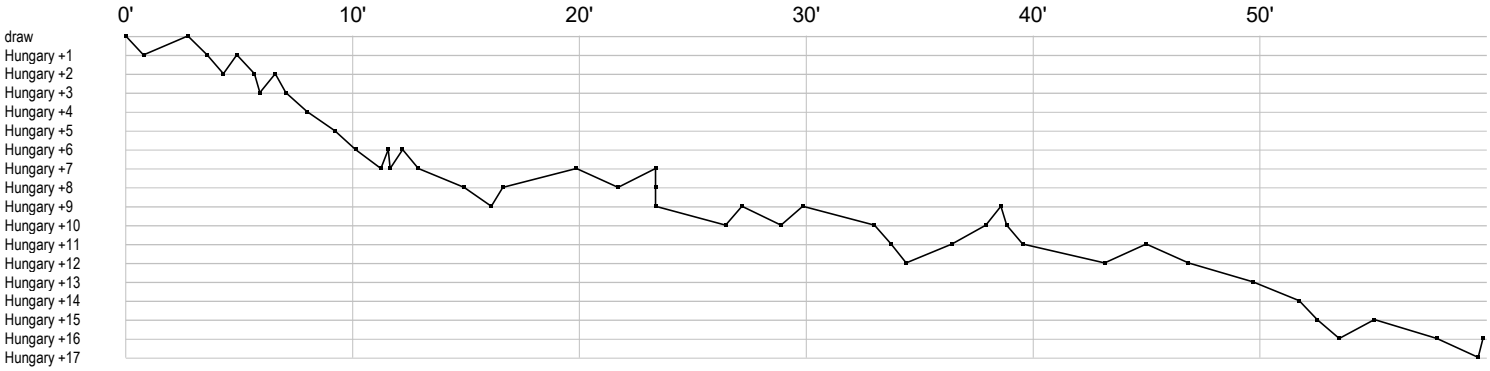

Hungary

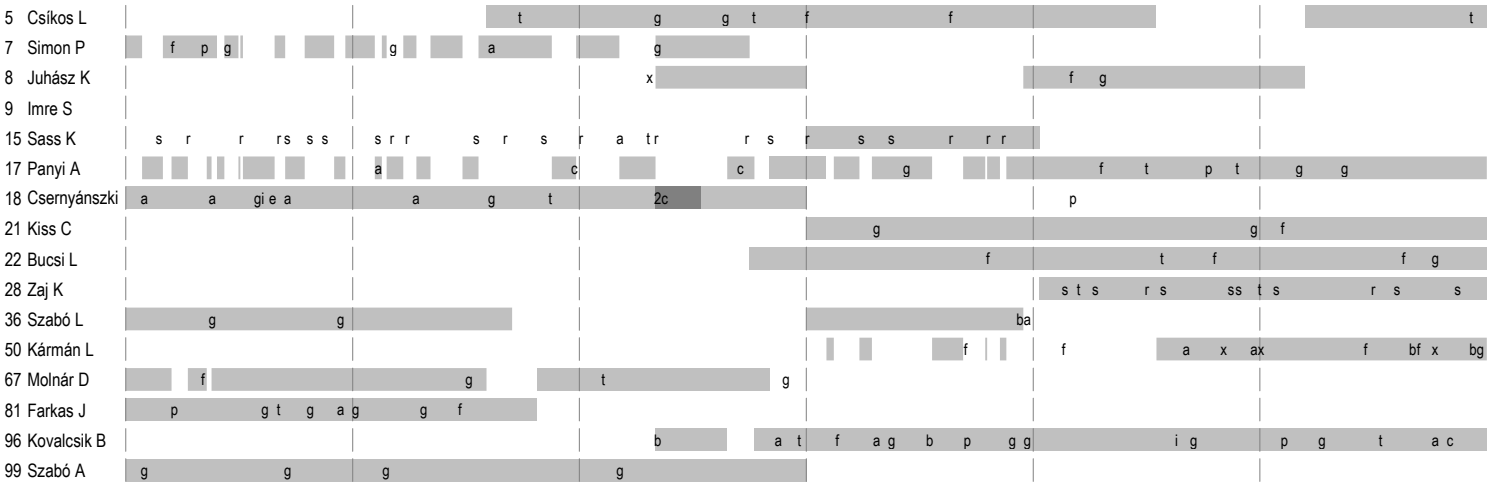

Brazil

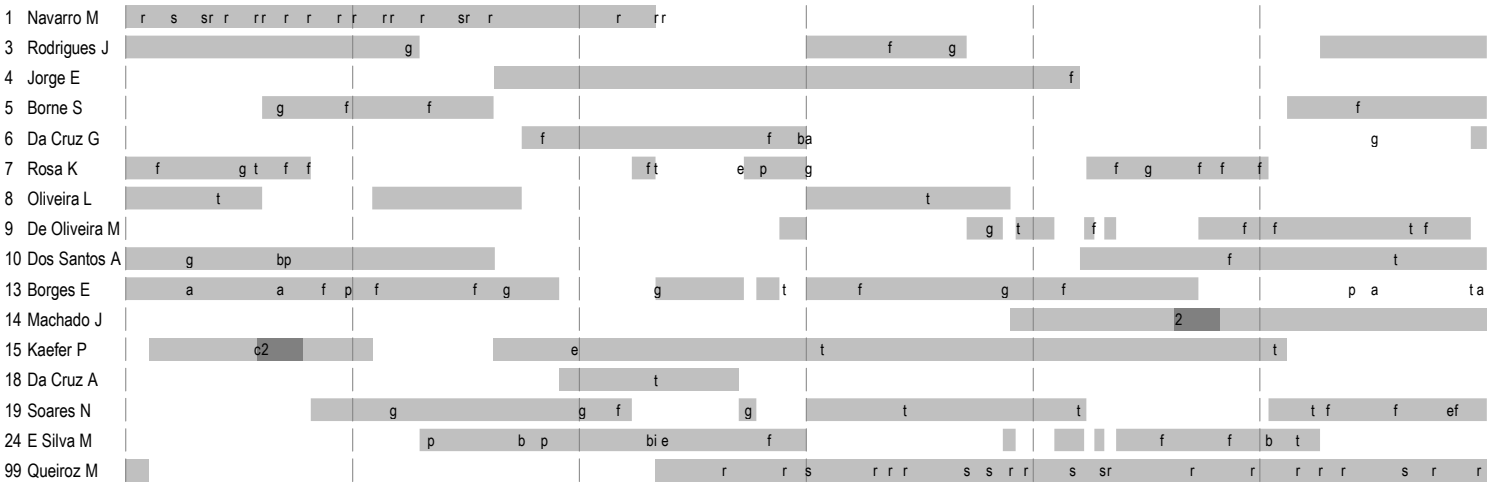

	In game	**g**	Goal scored	**f**	Missed shot	**a**	Assist	**t**	Technical faults	**b**	Steal
2	2min suspension	**e**	Eearned 7m	**c**	Commited 7m	**y**	Yellow card	**r**	Red Card	**k**	Blue card
i	Eearned 2min.	**x**	Block	**4**	4min suspension	**p**	Pass for clear chance	**s**	Saved shot	**r**	Received goal