IHF Women's Youth (18) World Championship

North Macedonia (Skopje)

Group A, 3. round

Match Team Statistics

Match No. 44

Montenegro 24 - 29 Sweden

(10 - 13) (14 - 16)

2.8.2022. 20:30

Attendance: 95

Sport Centre Jane Sandanski

Referees: Ruben Burgos (ARG) / Gonzalo Delgado (ARG)

Montenegro

Players			Goals / shots									Attack					Def.			Penalties				TP
#	Surname and name	S	Tot.	%	9m	6m	Wing	7m	FB	Brk.	LD	As.	PC	E7	E2	TF	St.	C7	Blk	YC	2m	R	B	
3	RADONJIC Tamara		2/2	100			2/2																	4:43
4	CEKLIC Maja		4/6	67			3/4		1/1		0/1						1	1						27:17
5	RADMANOVIC Nikoleta		0/1	0			0/1									2								18:21
6	RAZNATOVIC Mia	S	0/2	0	0/2								1			1								16:44
7	VUJADINOVIC Ivana	S															1							25:53
8	PAVICEVIC Lana		1/2	50		0/1	1/1							1										33:47
9	VUKCEVIC Jelena	S	4/8	50	1/3			2/2		1/2	0/1	2	1	1	1	3			1					46:39
10	MARKOVIC Nikolina		4/8	50	0/2					4/6		1	2	2	3	4	2				1			46:00
11	KOLIC Ema		2/4	50		2/4										1								23:02
12	MARSENIĆ Marija	S														1								55:23
13	RAMUSOVIC Nina																							7:39
14	MICEVSKI Nada	S	5/7	71		0/1		2/2		3/4		4	1			5								27:34
15	SUTOVIC Katarina	S	1/1	100	1/1							3	1		1	1		1	1		1			45:30
16	BAZOVIC Aleksandra																							4:37
18	MITROVIC Masa		1/1	100		1/1																		13:50
19	BRAJOVIC Andrea	S	0/2	0		0/2												1						23:01
	Team / bench																							
	UKUPNO		24/44	55	2/8	3/9	6/8	4/4	1/1	8/12	0/2	10	6	4	5	18	4	3	2	0	2	0	0	

Goalkeepers		Saves / shots								
#.	Surname and name	Tot.	%	9m	6m	Wing	7m	FB	Brk.	LD
12	MARSENIĆ Marija	4/30	13	1/4	0/4	1/10	0/3	1/2	1/7	
16	BAZOVIC Aleksandra	0/3	0			0/1		0/1	0/1	
	TOTAL	4/33	12	1/4	0/4	1/11	0/3	1/3	1/8	0/0

Coach: **Maja Savic**

Number of attacks: 60, Efficiency: 40%, Average Duration: 34.88 seconds

Attack by type of defense

	Shots	9m	6m	Wing	TF	E7	E2
On def. 6-0	19/37	2/8	3/9	6/8	18	4	5
Fastbreak	1/1				0	0	0

Defense by type

	Total	9m	6m	Wing	Stl.	C7	2m
Def. 5-1	24/42	3/13	4/4	10/14	4	3	2
Fastbreak	2/4				0	0	0

Attack with superiority / minority / goalkeeper out

	Attack				Reaction		
	Att.	Eff.	Shots	TF	FB	LD	Tot.
6 on 6 (GK out)	3	33%	1/1	2	0/0	0/0	0/0
6 on 6	44	45%	20/32	12			
6 on 5	13	23%	3/9	4			

Player superiority / GK out counted at the end of attack (in case it changes during attack)

Defense with superiority / minority / goalkeeper out

	Attack				Reaction		
	Att.	Eff.	Shots	TF	FB	LD	Tot.
7 on 6 (GK out)	1	0%	0/0	1	0/0	0/1	0/1
6 on 6 (GK out)	5	20%	1/2	3	0/0	0/1	0/1
6 on 6	45	51%	23/38	7			
5 on 6	4	50%	2/4	0			
6 on 5	5	60%	3/3	2			

Numbers show attacking numbers of oponnent. Lower efficiency of oponnent means better defense of this team

#	Jersey number	**Tot.**	Total shooting	**6m**	6m (line) shooting	**9m**	9m shooting	**Wng**	Wing shooting	**FB**	Fastbreak sh.	**7m**	7m penalty sh.
Brk.	Breakthrough sh.	**LD**	Long distance sh.	**As.**	Assists	**PC**	Pass clear chance	**E7**	Eearned 7m pen.	**TF**	Technical faults	**St.**	Steals
2m	2m punishments	**C7.**	Commited 7m	**E2**	Eearned 2m pun.	**YC.**	Yellow cards	**R/B**	Red/Blue cards	**Blk.**	Blocks	**S**	Starting Line-up

IHF Women's Youth (18) World Championship

North Macedonia (Skopje)

Group A, 3. round

Match Team Statistics

Match No. 44

Montenegro 24 - 29 Sweden

(10 - 13) (14 - 16)

2.8.2022. 20:30

Attendance: 95

Sport Centre Jane Sandanski

Referees: Ruben Burgos (ARG) / Gonzalo Delgado (ARG)

Shot distribution by player

3 T. Radonjic

1/1		
		1/1

4 M. Ceklic

	1/1	
1/1		1/1
		1/1

1 post 1 miss.

5 N. Radmanovic

0/1		

6 M. Raznatovic

1 post 1 miss.

7 I. Vujadinovic

8 L. Pavicevic

	0/1	

1/1 lob

9 J. Vukcevic

2/2	0/1	
	1/3	1/1

1 miss.

10 N. Markovic

1/1		
0/1	0/1	3/4

1 miss.

11 E. Kolic

1/1		
	0/1	
1/1		

1 post

13 N. Ramusovic

14 N. Micevski

1/1	1/1	
1/2		2/2

1 block

15 K. Sutovic

1/1		

18 M. Mitrovic

		1/1

19 A. Brajovic

		0/1

1 miss.

TOTAL

6/7	2/4	0/1
2/2	0/1	3/3
2/4	1/4	7/8

3 post 5 miss. 1 block 1/1 lob

Saves distribution goalkeepers

12 M. Marsenić

0/1		0/1
2/9	1/2	0/1
1/9		0/7

16 A. Bazovic

		0/1
0/1		
		0/1

TOTAL

0/1		0/2
2/10	1/2	0/1
1/9		0/8

Shots by position

ATTACK

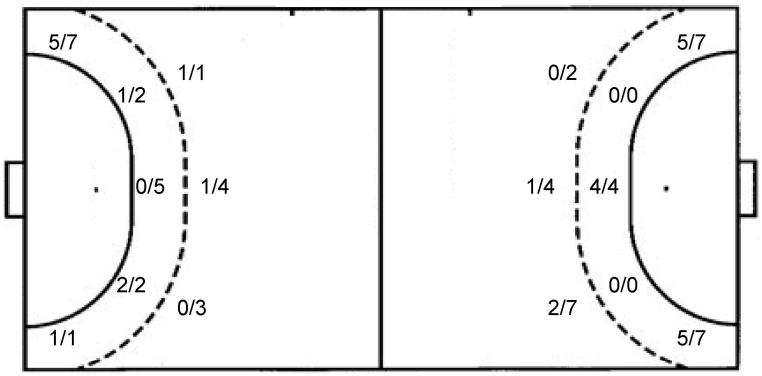

DEFENSE

7m penalties	4/4	7m penalties	3/3
Fastbreak	1/1	Fastbreak	2/4
Breakthrough	8/12	Breakthrough	7/11
Long dist.	0/2	Long dist.	0/0

Shooting statistics

Position	Goals	Sav.	Miss.	Post	Blk.	Total	%
Back (9m)	2	3	2	1	0	8	25
Line (6m)	3	3	1	1	1	9	33
Wing	6	1	0	1	0	8	75
7m penalties	4	0	0	0	0	4	100
Fastbreak	1	0	0	0	0	1	100
Breakthrough	8	4	0	0	0	12	67
Total	**24**	**11**	**3**	**3**	**1**	**42**	**57**

#	Jersey number	**Tot.**	Total shooting	**6m**	6m (line) shooting	**9m**	9m shooting	**Wng**	Wing shooting	**FB**	Fastbreak sh.	**7m**	7m penalty sh.
Brk.	Breakthrough sh.	**LD**	Long distance sh.	**As.**	Assists	**PC**	Pass clear chance	**E7**	Eearned 7m pen.	**TF**	Technical faults	**St.**	Steals
2m	2m punishments	**C7.**	Commited 7m	**E2**	Eearned 2m pun.	**YC.**	Yellow cards	**R/B**	Red/Blue cards	**Blk.**	Blocks	**S**	Starting Line-up

IHF Women's Youth (18) World Championship

North Macedonia (Skopje)

Group A, 3. round

Match Team Statistics

Match No. 44

Montenegro 24 - 29 Sweden

(10 - 13) (14 - 16)

2.8.2022. 20:30

Attendance: 95

Sport Centre Jane Sandanski

Referees: Ruben Burgos (ARG) / Gonzalo Delgado (ARG)

Sweden

Players			Goals / shots									Attack					Def.			Penalties				TP
#	Surname and name	S	Tot.	%	9m	6m	Wing	7m	FB	Brk.	LD	As.	PC	E7	E2	TF	St.	C7	Blk	YC	2m	R	B	
1	BERGFELDT Line	S														1								54:11
3	QVARFORDT Julia		2/3	67		1/1	1/2									1								8:05
5	KARLSSON Sol		4/4	100			3/3		1/1															25:18
6	SALMI Alice																	1						17:37
7	HUSELIUS Stella	S	8/10	80			4/5	3/3	1/2					1										51:55
8	LJUNGHOLM Isa		1/1	100						1/1		5					1		1					29:12
9	MIHAILOVIC Emma	S	2/6	33	1/4					1/2		3	1			1								29:26
10	KYLBERG Thea	S	5/10	50	2/7					3/3		6	1			3		1						53:23
11	WIKSFORS Stina	S	3/3	100		3/3						1		1	1	1	1				2			34:11
13	LÖNNEGREN Elise		1/2	50	0/1					1/1		1		1		1					1			13:12
17	WAHLBERG Freja		1/1	100						1/1						2								14:35
20	CARLSSON Tindra		0/2	0					0/1	0/1		1				1	1							8:41
21	JOHANSSON Ella																							5:49
23	SHULTZ Ebba		0/1	0						0/1							1							1:33
28	GRANAT Felicia	S	0/2	0	0/1					0/1		1	1			2		1			2			40:13
29	NORSTEN VIKSTRÖM Felicia	S	2/4	50			2/4						1				2	1						32:39
	Team / bench																							
	UKUPNO		29/49	59	3/13	4/4	10/14	3/3	2/4	7/11	0/0	18	4	3	1	13	6	4	1	0	5	0	0	

Goalkeepers		Saves / shots								
#.	Surname and name	Tot.	%	9m	6m	Wing	7m	FB	Brk.	LD
1	BERGFELDT Line	11/31	35	3/5	3/5	1/6	0/2	0/1	4/12	
21	JOHANSSON Ella	0/4	0		0/1	0/1	0/2			
	TOTAL	11/35	31	3/5	3/6	1/7	0/4	1/1	4/12	0/0

Coach: **Tomas Axnér**

Number of attacks: 60, Efficiency: 48%, Average Duration: 24.80 seconds

Attack by type of defense

	Shots	9m	6m	Wing	TF	E7	E2
On def. 5-1	24/42	3/13	4/4	10/14	13	3	1
Fastbreak	2/4				0	0	0

Defense by type

	Total	9m	6m	Wing	Stl.	C7	2m
Def. 6-0	19/37	2/8	3/9	6/8	6	4	5
Fastbreak	1/1				0	0	0

Attack with superiority / minority / goalkeeper out

	Attack				Reaction		
	Att.	Eff.	Shots	TF	FB	LD	Tot.
7 on 6 (GK out)	1	0%	0/0	1	0/0	0/1	0/1
6 on 6 (GK out)	5	20%	1/2	3	0/0	0/1	0/1
6 on 6	45	51%	23/38	7			
5 on 6	4	50%	2/4	0			
6 on 5	5	60%	3/3	2			

Player superiority / GK out counted at the end of attack (in case it changes during attack)

Defense with superiority / minority / goalkeeper out

	Attack				Reaction		
	Att.	Eff.	Shots	TF	FB	LD	Tot.
6 on 6 (GK out)	3	33%	1/1	2	0/0	0/0	0/0
6 on 6	44	45%	20/32	12			
6 on 5	13	23%	3/9	4			

Numbers show attacking numbers of oponnent. Lower efficiency of oponnent means better defense of this team

#	Jersey number	**Tot.**	Total shooting	**6m**	6m (line) shooting	**9m**	9m shooting	**Wng**	Wing shooting	**FB**	Fastbreak sh.	**7m**	7m penalty sh.
Brk.	Breakthrough sh.	**LD**	Long distance sh.	**As.**	Assists	**PC**	Pass clear chance	**E7**	Eearned 7m pen.	**TF**	Technical faults	**St.**	Steals
2m	2m punishments	**C7.**	Commited 7m	**E2**	Eearned 2m pun.	**YC.**	Yellow cards	**R/B**	Red/Blue cards	**Blk.**	Blocks	**S**	Starting Line-up

IHF Women's Youth (18) World Championship

North Macedonia (Skopje)

Group A, 3. round

Match Team Statistics

Match No. 44

Montenegro 24 - 29 Sweden

(10 - 13) (14 - 16)

2.8.2022. 20:30
Attendance: 95
Sport Centre Jane Sandanski

Referees: Ruben Burgos (ARG) / Gonzalo Delgado (ARG)

Shot distribution by player

3 J. Qvarfordt

		1/1
	1/1	

1 post

5 S. Karlsson

		1/1
2/2		1/1

6 A. Salmi

7 S. Huselius

2/2		
5/6		1/1

1 post

8 I. Ljungholm

		1/1

9 E. Mihailovic

1/1	0/1	
		1/1

3 miss.

10 T. Kylberg

1/1		
1/2		
		3/3

1 post 2 miss. 1 block

11 S. Wiksfors

1/1		
2/2		

13 E. Lönnegren

1/1		

1 block

17 F. Wahlberg

		1/1

20 T. Carlsson

0/1		

1 miss.

23 E. Shultz

1 miss.

28 F. Granat

2 post

29 F. Norsten Vikström

1/1		1/1

1 post 1 miss.

TOTAL

1/1		2/2
8/10	1/2	1/1
8/9		8/8

6 post 8 miss. 2 block

Saves distribution goalkeepers

1 L. Bergfeldt

1/6	2/4	1/1
0/2	1/1	0/2
2/4	3/4	1/6

21 E. Johansson

0/1		
		0/1
		0/2

TOTAL

1/7	2/4	1/1
0/2	1/1	0/3
2/4	3/4	1/8

Shots by position

ATTACK

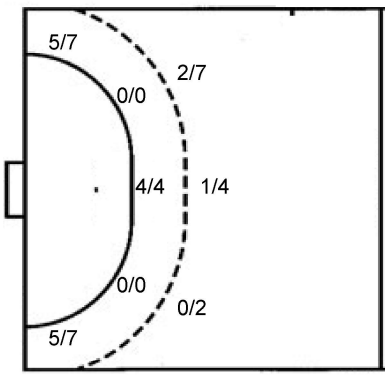

7m penalties	3/3
Fastbreak	2/4
Breakthrough	7/11
Long dist.	0/0

DEFENSE

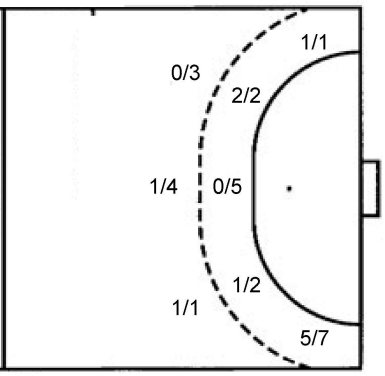

7m penalties	4/4
Fastbreak	1/1
Breakthrough	8/12
Long dist.	0/2

Shooting statistics

Position	Goals	Sav.	Miss.	Post	Blk.	Total	%
Back (9m)	3	1	5	2	2	13	23
Line (6m)	4	0	0	0	0	4	100
Wing	10	1	1	2	0	14	71
7m penalties	3	0	0	0	0	3	100
Fastbreak	2	1	0	1	0	4	50
Breakthrough	7	1	2	1	0	11	64
Total	**29**	**4**	**8**	**6**	**2**	**49**	**59**

#	Jersey number	**Tot.**	Total shooting	**6m**	6m (line) shooting	**9m**	9m shooting	**Wng**	Wing shooting	**FB**	Fastbreak sh.	**7m**	7m penalty sh.
Brk.	Breakthrough sh.	**LD**	Long distance sh.	**As.**	Assists	**PC**	Pass clear chance	**E7**	Eearned 7m pen.	**TF**	Technical faults	**St.**	Steals
2m	2m punishments	**C7.**	Commited 7m	**E2**	Eearned 2m pun.	**YC.**	Yellow cards	**R/B**	Red/Blue cards	**Blk.**	Blocks	**S**	Starting Line-up

IHF Women's Youth (18) World Championship

North Macedonia (Skopje)

Group A, 3. round

Match Team Statistics

Match No. 44

Montenegro 24 - 29 Sweden

(10 - 13) (14 - 16)

2.8.2022. 20:30

Attendance: 95

Sport Centre Jane Sandanski

Referees: Ruben Burgos (ARG) / Gonzalo Delgado (ARG)

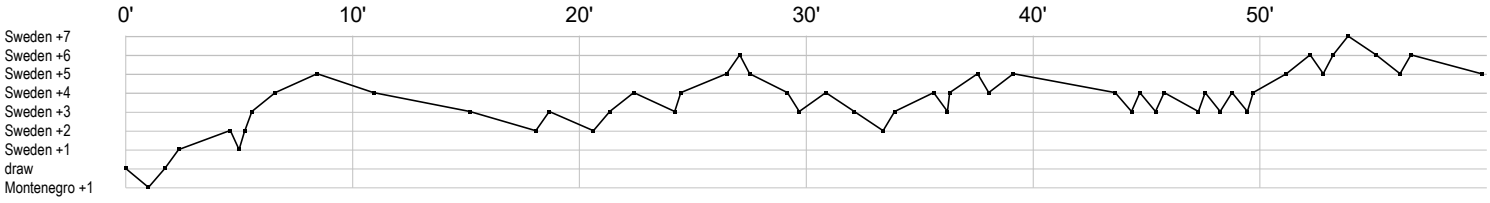

Montenegro

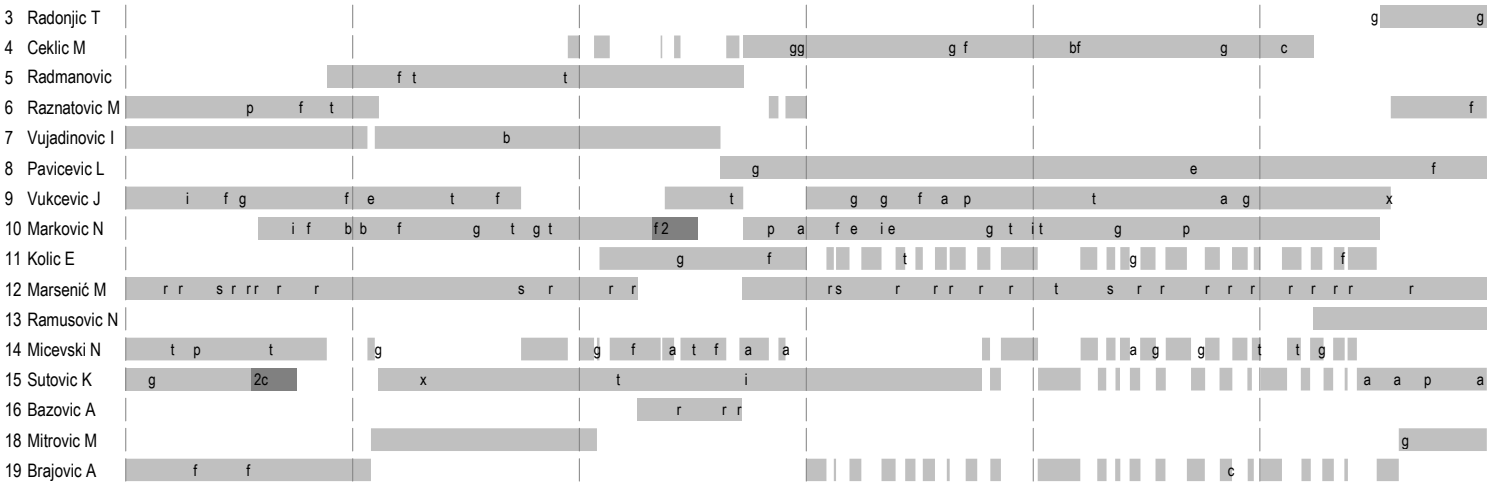

Sweden

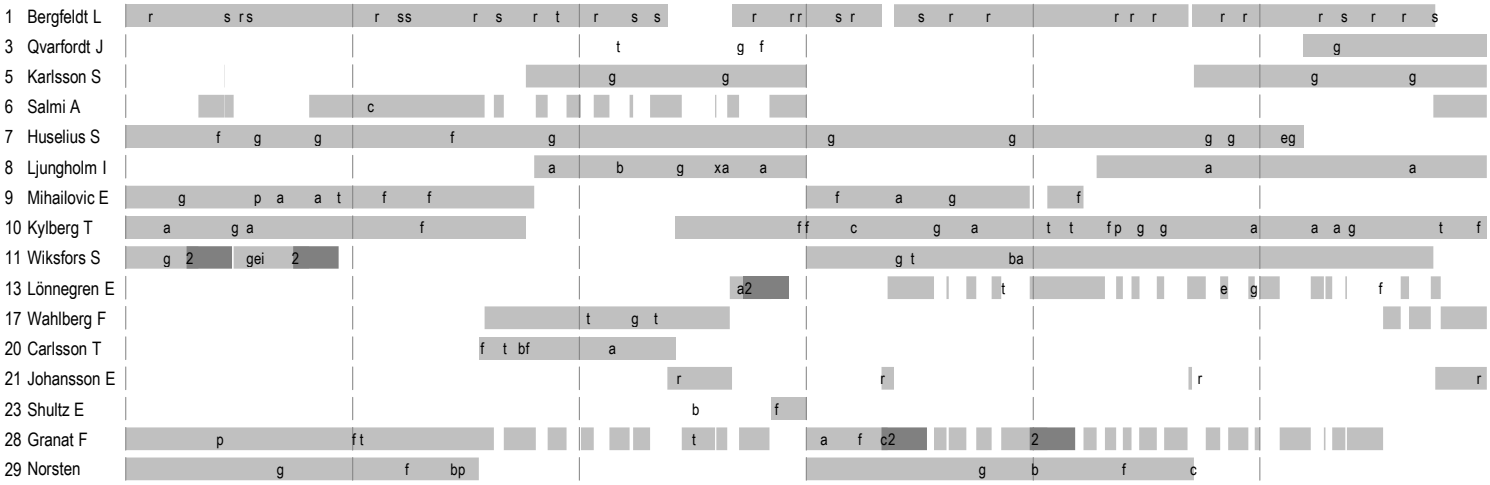

	In game	**g**	Goal scored	**f**	Missed shot	**a**	Assist	**t**	Technical faults	**b**	Steal
2	2min suspension	**e**	Eearned 7m	**c**	Commited 7m	**y**	Yellow card	**r**	Red Card	**k**	Blue card
i	Eearned 2min.	**x**	Block	**4**	4min suspension	**p**	Pass for clear chance	**s**	Saved shot	**r**	Received goal