IHF Women's Youth (18) World Championship

North Macedonia (Skopje)

Group C, 2. round

Match Team Statistics

Match No. 24

Portugal 33 - 27 Austria

(13 - 11) (20 - 16)

31.7.2022. 20:30

Attendance: 100

Sport Centre Jane Sandanski

Referees: Ruben Burgos (ARG) / Gonzalo Delgado (ARG)

Portugal

Players			Goals / shots									Attack					Def.			Penalties				TP
#	Surname and name	S	Tot.	%	9m	6m	Wing	7m	FB	Brk.	LD	As.	PC	E7	E2	TF	St.	C7	Blk	YC	2m	R	B	
1	COSTA Maria																							0:57
2	PICO Maria		4/6	67		1/1	2/2	0/1	1/1	0/1							1							30:00
3	JESUS Luana	S	3/5	60	1/1		1/3		1/1						1	1								30:00
5	FERREIRA Sofia																							0:33
8	SEQUEIRA Constança	S	5/6	83	2/2	0/1		2/2		1/1		2												19:37
10	FIGUEIREDO Carmen	S	1/3	33	1/2					0/1		1	2	1	1		2							34:00
11	ANTUNES Leonor	S	1/1	100		1/1						1				3			1					23:40
12	ROSA Matilde	S														1								36:09
13	FIGUEIRA Júlia	S	1/4	25			0/2		1/2					1	1	1		1						27:01
14	FERNANDES Denise		4/5	80	0/1	1/1	2/2		1/1			1					1	1						32:59
15	REBELO Luciana	S	3/9	33	2/7					1/1	0/1	5	2			3	1	1						51:05
16	GUIMARAES Rita											1												22:54
17	SEMEDO Joana											1				1		3			1			13:49
19	CORREIA Matilde		4/7	57	1/1	3/6						1		1	1			2			2			30:53
21	SILVA Mariana		2/4	50	0/1	0/1			1/1	1/1		1				1								26:00
22	GONÇALVES Naíde		5/10	50	1/1			1/1	2/3	1/5		1	3	1		1	1							40:23
	Team / bench																							
	UKUPNO		33/60	55	8/16	6/11	5/9	3/4	7/9	4/10	0/1	15	7	4	4	12	6	8	1	0	3	0	0	

Goalkeepers		Saves / shots								
#.	Surname and name	Tot.	%	9m	6m	Wing	7m	FB	Brk.	LD
1	COSTA Maria	0/1	0				0/1			
12	ROSA Matilde	3/11	27	1/2	1/3		0/2		1/4	
16	GUIMARAES Rita	9/27	33	4/5	1/5	0/2	1/5	2/3	1/7	
	TOTAL	12/39	31	5/7	2/8	0/2	1/8	2/3	2/11	0/0

Coach: **Luís Santos**

Number of attacks: 67, Efficiency: 49%, Average Duration: 25.39 seconds

Attack by type of defense

	Shots	9m	6m	Wing	TF	E7	E2
On def. 6-0	23/46	8/16	6/11	5/9	12	4	4
Fastbreak	7/9				0	0	0

Defense by type

	Total	9m	6m	Wing	Stl.	C7	2m
Def. 6-0	19/38	2/11	6/9	2/4	6	8	3
Fastbreak	1/3				0	0	0

Attack with superiority / minority / goalkeeper out

	Attack				Reaction		
	Att.	Eff.	Shots	TF	FB	LD	Tot.
6 on 6	52	48%	25/42	10			
6 on 5	9	44%	4/8	1			
5 on 6	6	67%	4/5	1			

Player superiority / GK out counted at the end of attack (in case it changes during attack)

Defense with superiority / minority / goalkeeper out

	Attack				Reaction		
	Att.	Eff.	Shots	TF	FB	LD	Tot.
6 on 6 (GK out)	1	0%	0/0	1	1/1	0/0	1/1
6 on 6	50	44%	22/36	14			
5 on 6	6	17%	1/3	3			
6 on 5	7	57%	4/6	1			

Numbers show attacking numbers of oponnent. Lower efficiency of oponnent means better defense of this team

#	Jersey number	**Tot.**	Total shooting	**6m**	6m (line) shooting	**9m**	9m shooting	**Wng**	Wing shooting	**FB**	Fastbreak sh.	**7m**	7m penalty sh.
Brk.	Breakthrough sh.	**LD**	Long distance sh.	**As.**	Assists	**PC**	Pass clear chance	**E7**	Eearned 7m pen.	**TF**	Technical faults	**St.**	Steals
2m	2m punishments	**C7.**	Commited 7m	**E2**	Eearned 2m pun.	**YC.**	Yellow cards	**R/B**	Red/Blue cards	**Blk.**	Blocks	**S**	Starting Line-up

IHF Women's Youth (18) World Championship

North Macedonia (Skopje)

Group C, 2. round

Match Team Statistics

Match No. 24

Portugal 33 - 27 Austria

(13 - 11) (20 - 16)

31.7.2022. 20:30
Attendance: 100
Sport Centre Jane Sandanski

Referees: Ruben Burgos (ARG) / Gonzalo Delgado (ARG)

Shot distribution by player

2 M. Pico

		0/1
1/1	1/1	
1/1		

1 miss. 1/1 lob

3 L. Jesus

	0/2	1/1
	2/2	

5 S. Ferreira

8 C. Sequeira

1/1		2/2
		1/1
		1/2

10 C. Figueiredo

		1/1

1 post 1 miss.

11 L. Antunes

1/1		

13 J. Figueira

1/1	0/2	

1 post

14 D. Fernandes

1/1		0/1
		1/1
1/1		1/1

15 L. Rebelo

		1/1
1/2		1/2

3 post 1 miss.

17 J. Semedo

19 M. Correia

3/3	0/1	1/2

1 miss.

21 M. Silva

	0/1	
		2/2

1 post

22 N. Gonçalves

0/1	1/4	1/1
		3/3

1 miss.

TOTAL

7/7	0/5	4/7
1/2	4/8	4/4
3/4		9/11

6 post 5 miss. 1/1 lob

Saves distribution goalkeepers

1 M. Costa

		0/1

12 M. Rosa

		1/2
0/2	1/2	1/2
0/2		0/1

16 R. Guimaraes

0/1	0/2	1/2
2/3	3/5	1/4
1/4		1/4

TOTAL

0/1	0/2	2/5
2/5	4/7	2/6
1/6		1/5

Shots by position

ATTACK

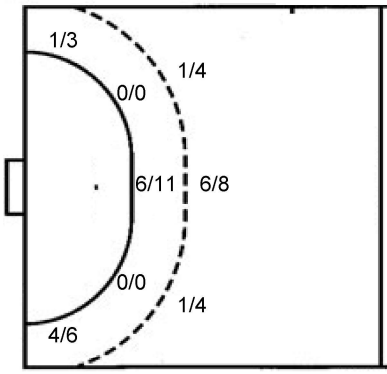

7m penalties	3/4
Fastbreak	7/9
Breakthrough	4/10
Long dist.	0/1

DEFENSE

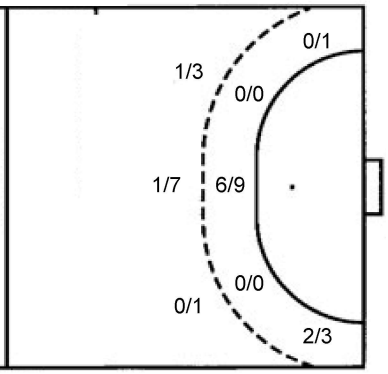

7m penalties	7/8
Fastbreak	1/3
Breakthrough	9/14
Long dist.	0/0

Shooting statistics

Position	Goals	Sav.	Miss.	Post	Blk.	Total	%
Back (9m)	8	3	0	5	0	16	50
Line (6m)	6	4	1	0	0	11	55
Wing	5	3	0	1	0	9	56
7m penalties	3	0	1	0	0	4	75
Fastbreak	7	2	0	0	0	9	78
Breakthrough	4	4	2	0	0	10	40
Total	**33**	**16**	**4**	**6**	**0**	**59**	**56**

#	Jersey number	**Tot.**	Total shooting	**6m**	6m (line) shooting	**9m**	9m shooting	**Wng**	Wing shooting	**FB**	Fastbreak sh.	**7m**	7m penalty sh.
Brk.	Breakthrough sh.	**LD**	Long distance sh.	**As.**	Assists	**PC**	Pass clear chance	**E7**	Earned 7m pen.	**TF**	Technical faults	**St.**	Steals
2m	2m punishments	**C7.**	Commited 7m	**E2**	Earned 2m pun.	**YC.**	Yellow cards	**R/B**	Red/Blue cards	**Blk.**	Blocks	**S**	Starting Line-up

IHF Women's Youth (18) World Championship

North Macedonia (Skopje)

Group C, 2. round

Match Team Statistics

Match No. 24

Portugal 33 - 27 Austria

(13 - 11) (20 - 16)

31.7.2022. 20:30

Attendance: 100

Sport Centre Jane Sandanski

Referees: Ruben Burgos (ARG) / Gonzalo Delgado (ARG)

Austria

Players			Goals / shots									Attack					Def.			Penalties				TP
#	Surname and name	S	Tot.	%	9m	6m	Wing	7m	FB	Brk.	LD	As.	PC	E7	E2	TF	St.	C7	Blk	YC	2m	R	B	
1	HERNACH Valentina																							4:05
3	DOTZLER Alina	S	0/1	0	0/1											2								16:55
5	GÖTZE Laura		0/1	0	0/1											2								9:41
6	LAUTER Anna-Maria	S										1		2	1									23:52
7	PURKARTHOFER Lisa	S	0/1	0					0/1															20:29
8	EGGER Philomena		1/3	33		0/1	1/2																	28:06
9	SPITZER Cara	S	0/1	0					0/1					1				1			1			32:44
12	JANCIC Sara																							
14	BALJAK Lorena	S	3/4	75			1/1			2/3			1	1	1	3					1			48:32
15	PROKOP Marie	S	8/15	53	1/4	0/1		5/6		2/4		2		2	1									33:26
16	TILLIACHER Nina	S																						49:13
17	MORITZ Anna	S	0/1	0			0/1																	24:28
18	MARKSTEINER Viktoria	S	3/7	43	1/4					2/3		1	1	1		4		1						31:41
20	BRÄNDLE Emilia		4/6	67	0/1	1/1		1/1		2/3		2	1			4	1							25:07
23	MUSTEDANAGIC Ines		2/3	67		0/1		1/1		1/1		1				3		1						26:37
24	KOVACS Lina	S	6/6	100		5/5			1/1					1		1		1			2			45:04
	Team / bench																							
	UKUPNO		27/49	55	2/11	6/9	2/4	7/8	1/3	9/14	0/0	7	3	8	3	19	1	4	0	0	4	0	0	

Goalkeepers		Saves / shots								
#.	Surname and name	Tot.	%	9m	6m	Wing	7m	FB	Brk.	LD
1	HERNACH Valentina	0/3	0			0/1		0/1	0/1	
12	JANCIC Sara									
16	TILLIACHER Nina	16/46	35	3/11	4/10	3/7	0/3	2/8	4/7	
	TOTAL	16/49	33	3/11	4/10	3/8	0/3	4/9	4/8	0/0

Coach: **Simona Spiridon**

Number of attacks: 64, Efficiency: 42%, Average Duration: 29.66 seconds

Attack by type of defense

	Shots	9m	6m	Wing	TF	E7	E2
On def. 6-0	19/38	2/11	6/9	2/4	19	8	3
Fastbreak	1/3				0	0	0

Defense by type

	Total	9m	6m	Wing	Stl.	C7	2m
Def. 6-0	23/46	8/16	6/11	5/9	1	4	4
Fastbreak	7/9				0	0	0

Attack with superiority / minority / goalkeeper out

	Attack				Reaction		
	Att.	Eff.	Shots	TF	FB	LD	Tot.
6 on 6 (GK out)	1	0%	0/0	1	1/1	0/0	1/1
6 on 6	50	44%	22/36	14			
5 on 6	6	17%	1/3	3			
6 on 5	7	57%	4/6	1			

Player superiority / GK out counted at the end of attack (in case it changes during attack)

Defense with superiority / minority / goalkeeper out

	Attack				Reaction		
	Att.	Eff.	Shots	TF	FB	LD	Tot.
6 on 6	52	48%	25/42	10			
6 on 5	9	44%	4/8	1			
5 on 6	6	67%	4/5	1			

Numbers show attacking numbers of oponnent. Lower efficiency of oponnent means better defense of this team

#	Jersey number	**Tot.**	Total shooting	**6m**	6m (line) shooting	**9m**	9m shooting	**Wng**	Wing shooting	**FB**	Fastbreak sh.	**7m**	7m penalty sh.
Brk.	Breakthrough sh.	**LD**	Long distance sh.	**As.**	Assists	**PC**	Pass clear chance	**E7**	Eearned 7m pen.	**TF**	Technical faults	**St.**	Steals
2m	2m punishments	**C7.**	Commited 7m	**E2**	Eearned 2m pun.	**YC.**	Yellow cards	**R/B**	Red/Blue cards	**Blk.**	Blocks	**S**	Starting Line-up

IHF Women's Youth (18) World Championship

North Macedonia (Skopje)

Group C, 2. round

Match Team Statistics

Match No. 24

Portugal 33 - 27 Austria

(13 - 11) (20 - 16)

31.7.2022. 20:30

Attendance: 100

Sport Centre Jane Sandanski

Referees: Ruben Burgos (ARG) / Gonzalo Delgado (ARG)

Shot distribution by player

3 A. Dotzler

		0/1

5 L. Götze

0/1		

6 A. Lauter

7 L. Purkarthofer

		0/1

8 P. Egger

		1/1

1 post 1 miss.

9 C. Spitzer

	0/1	

14 L. Baljak

		1/1
	1/1	1/1

1 miss.

15 M. Prokop

	1/1	0/1
3/4	1/2	1/1
1/1		1/1

2 post 2 block

17 A. Moritz

1 post

18 V. Marksteiner

1/1		
		1/2
0/1		1/1

1 post 1 miss.

20 E. Brändle

	1/1	
	0/1	1/1
2/2		0/1

23 I. Mustedanagic

		1/1
	0/1	
1/1		

24 L. Kovacs

		1/1
	1/1	
1/1		1/1

2/2 lob

TOTAL

1/1	2/2	3/5
3/5	3/7	4/6
5/6		4/5

5 post 3 miss. 2 block 2/2 lob

Saves distribution goalkeepers

1 V. Hernach

		0/2

12 S. Jancic

16 N. Tilliacher

0/7	5/5	3/7
1/2	4/8	0/4
1/4		2/9

TOTAL

0/7	5/5	3/7
1/2	4/8	0/4
1/4		2/11

Shots by position

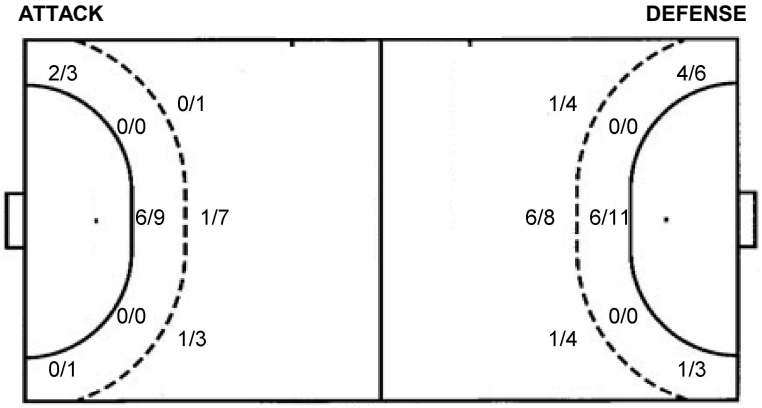

7m penalties	7/8	7m penalties	3/4
Fastbreak	1/3	Fastbreak	7/9
Breakthrough	9/14	Breakthrough	4/10
Long dist.	0/0	Long dist.	0/1

Shooting statistics

Position	Goals	Sav.	Miss.	Post	Blk.	Total	%
Back (9m)	2	5	1	2	1	11	18
Line (6m)	6	2	0	1	0	9	67
Wing	2	0	1	1	0	4	50
7m penalties	7	1	0	0	0	8	88
Fastbreak	1	2	0	0	0	3	33
Breakthrough	9	2	1	1	1	14	64
Total	**27**	**12**	**3**	**5**	**2**	**49**	**55**

#	Jersey number	**Tot.**	Total shooting	**6m**	6m (line) shooting	**9m**	9m shooting	**Wng**	Wing shooting	**FB**	Fastbreak sh.	**7m**	7m penalty sh.
Brk.	Breakthrough sh.	**LD**	Long distance sh.	**As.**	Assists	**PC**	Pass clear chance	**E7**	Earned 7m pen.	**TF**	Technical faults	**St.**	Steals
2m	2m punishments	**C7.**	Commited 7m	**E2**	Earned 2m pun.	**YC.**	Yellow cards	**R/B**	Red/Blue cards	**Blk.**	Blocks	**S**	Starting Line-up

Handball statistics and livescore by Toma-soft ltd (www.toma-soft.hr)

IHF Women's Youth (18) World Championship

North Macedonia (Skopje)

Group C, 2. round

Match Team Statistics

Match No. 24

Portugal 33 - 27 Austria

(13 - 11) (20 - 16)

31.7.2022. 20:30
Attendance: 100
Sport Centre Jane Sandanski

Referees: Ruben Burgos (ARG) / Gonzalo Delgado (ARG)

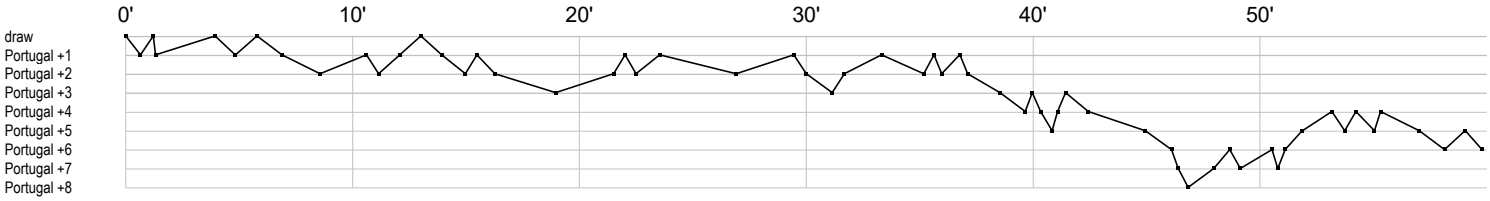

Portugal

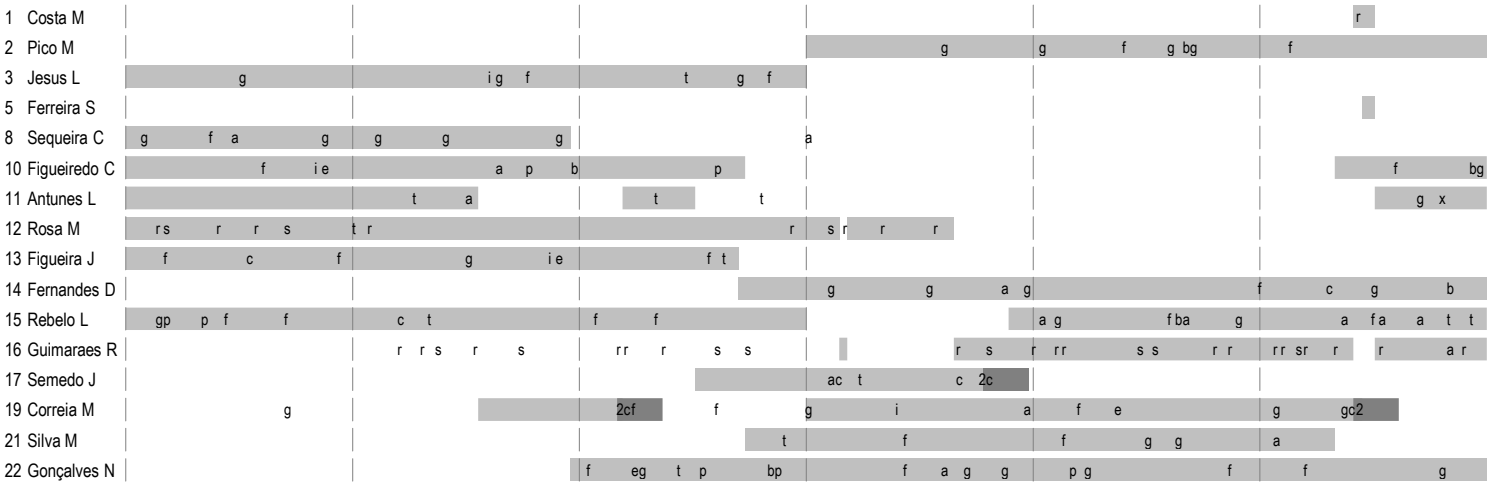

Austria

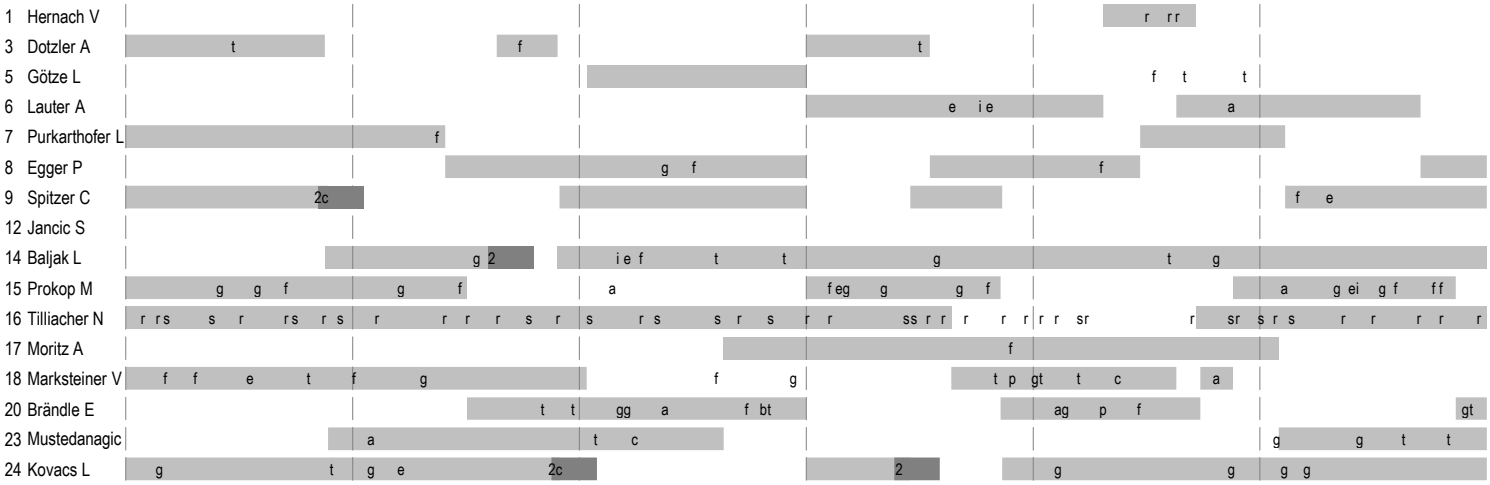

	In game	**g**	Goal scored	**f**	Missed shot	**a**	Assist	**t**	Technical faults	**b**	Steal
2	2min suspension	**e**	Eearned 7m	**c**	Commited 7m	**y**	Yellow card	**r**	Red Card	**k**	Blue card
i	Eearned 2min.	**x**	Block	**4**	4min suspension	**p**	Pass for clear chance	**s**	Saved shot	**r**	Received goal

Handball statistics and livescore by Toma-soft ltd (www.toma-soft.hr)