25th IHF Men's Junior World Championship 2025

Final Round, Quarterfinals

Match Team Statistics
Match No. 92

Germany 26 - 32 Sweden
(14 - 16) (12 - 16)

26.6.2025. 21:00
Attendance: 525
Arena Katowice

Referees: Cristian Lemes (URU) / Mathias Sosa (URU)

Germany

Players			Goals / shots									Attack					Def.			Penalties				TP
#	Surname and name	S	Tot.	%	9m	6m	Wing	7m	FB	Brk.	LD	As.	PC	E7	E2	TF	St.	C7	Blk	YC	2m	R	B	
1	BUCHELE Marc Julian																							16:50
2	MÓRÉ David	S	7/9	78			0/1	7/8																56:08
3	NEWEL Elias	S	1/2	50	1/2							3	1	3		3								26:19
4	DROSTEN Florian		0/1	0				0/1																0:08
5	GÖTTLER Felix																							3:30
7	HAAKE Fritz																							0:04
8	GÖMMEL Tim	S	1/2	50				0/1	1/1							2	1							36:31
10	KUTZ Linus	S	4/6	67	1/1					3/5			1	3	1	2	1							31:28
11	PABST Henri	S	2/2	100		1/1				1/1		1		1	2	1		1		1	2			26:03
12	HÖLER Frederik	S																						36:41
14	PREUßNER Anton		5/7	71	3/4					2/3				3	3	5		2			1			37:56
17	SCHMIDT Jan	S	2/2	100		2/2								2		1		1	1		1			54:58
19	LÖWEN Georg																1							
20	HAACK Leif		2/2	100		1/1					1/1	1				1	1	1			1			36:09
22	SCHEERER Florian																		1		1			40:18
35	UNBEHAUN Levin		2/3	67			0/1	2/2																16:57
	Team / bench																							
	TOTAL		26/36	72	5/7	4/4	0/2	9/12	1/1	6/9	1/1	5	2	12	6	15	4	5	2	1	6	0	0	

Goalkeepers		Saves / shots								
#.	Surname and name	Tot.	%	9m	6m	Wing	7m	FB	Brk.	LD
1	BUCHELE Marc Julian	3/12	25	1/2	1/3		0/1	0/1	1/5	
12	HÖLER Frederik	5/26	19	4/7	0/2	0/6	0/4	0/3	1/4	
	TOTAL	8/38	21	5/9	1/5	0/6	0/5	0/4	2/9	0/0

Coach: **Martin Heuberger**

Number of attacks: 51, Efficiency: 51%, Average Duration: 30.78 seconds

Attack by type of defense

	Shots	9m	6m	Wing	TF	E7	E2
On def. 6-0	15/22	5/7	4/4	0/2	15	12	6
Fastbreak	1/1				0	0	0

Defense by type

	Total	9m	6m	Wing	Stl.	C7	2m
Def. 6-0	17/32	4/14	4/5	5/6	3	5	0
Def. 5-1	1/3	0/0	0/0	0/0	1	0	0
Def. press.	2/3	0/1	0/0	0/0	0	0	0
Fastbreak	5/5				0	0	6

Attack with superiority / minority / goalkeeper out

	Attack				Reaction		
	Att.	Eff.	Shots	TF	FB	LD	Tot.
7 on 6 (GK out)	7	43%	3/4	3	1/1	0/0	1/1
7 on 5 (GK out)	3	33%	1/1	2	0/0	0/0	0/0
6 on 6 (GK out)	3	0%	0/0	3	1/1	0/0	1/1
6 on 5 (GK out)	5	80%	4/5	0	0/0	0/0	0/0
6 on 6	25	48%	12/19	6			
6 on 5	6	83%	5/6	0			
5 on 6	1	0%	0/0	1			
5 on 5	1	100%	1/1	0			

Player superiority / GK out counted at the end of attack (in case it changes during attack)

Defense with superiority / minority / goalkeeper out

	Attack				Reaction		
	Att.	Eff.	Shots	TF	FB	LD	Tot.
7 on 6 (GK out)	5	60%	3/5	0	0/0	0/0	0/0
6 on 6 (GK out)	8	50%	4/7	1	0/0	1/1	1/1
6 on 6	29	59%	17/26	3			
7 on 5 (GK out)	2	100%	2/2	0	0/0	0/0	0/0
6 on 5 (GK out)	4	75%	3/4	0	0/0	0/0	0/0
6 on 5	3	67%	2/3	0			
6 on 4 (GK out)	1	100%	1/1	0	0/0	0/0	0/0

Numbers show attacking numbers of oponnent. Lower efficiency of oponnent means better defense of this team

#	Jersey number	**Tot.**	Total shooting	**6m**	6m (line) shooting	**9m**	9m shooting	**Wng**	Wing shooting	**FB**	Fastbreak sh.	**7m**	7m penalty sh.
Brk.	Breakthrough sh.	**LD**	Long distance sh.	**As.**	Assists	**PC**	Pass clear chance	**E7**	Earned 7m pen.	**TF**	Technical faults	**St.**	Steals
2m	2m punishments	**C7.**	Commited 7m	**E2**	Earned 2m pun.	**YC.**	Yellow cards	**R/B**	Red/Blue cards	**Blk.**	Blocks	**S**	Starting Line-up

25th IHF Men's Junior World Championship 2025

Final Round, Quarterfinals

Match Team Statistics
Match No. 92

Germany 26 - 32 Sweden
(14 - 16) (12 - 16)

26.6.2025. 21:00
Attendance: 525
Arena Katowice

Referees: Cristian Lemes (URU) / Mathias Sosa (URU)

Shot distribution by player

2 D. Móré

		1/2
4/5		2/2

3 E. Newel

1/1		
0/1		

4 F. Drosten

1 post

5 F. Göttler

7 F. Haake

8 T. Gömmel

		1/1
0/1		

10 L. Kutz

1/1	0/1	3/3
0/1		

11 H. Pabst

2/2		

14 A. Preußner

2/2		
		1/1
2/3		

1 post

17 J. Schmidt

1/1		
		1/1

19 G. Löwen

20 L. Haack

	1/1	1/1

22 F. Scheerer

35 L. Unbehaun

		0/1
		2/2

TOTAL

6/6		0/1
1/2	1/2	7/8
6/10		5/5

2 post

Saves distribution goalkeepers

1 M. Buchele

0/2		0/1
		0/3
1/3		2/3

12 F. Höler

0/7	0/1	0/2
0/3	1/1	2/6
0/1	2/2	0/3

TOTAL

0/9	0/1	0/3
0/3	1/1	2/9
1/4	2/2	2/6

Shots by position

ATTACK

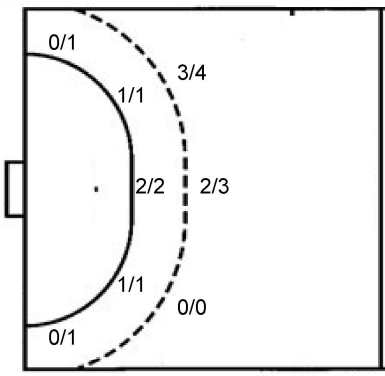

7m penalties	9/12
Fastbreak	1/1
Breakthrough	6/9
Long dist.	1/1

DEFENSE

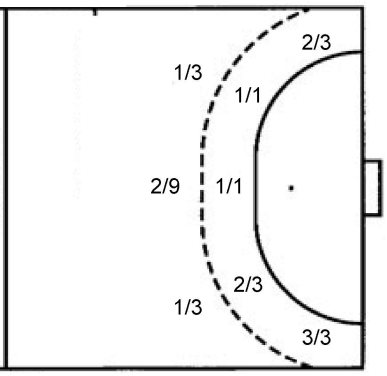

7m penalties	5/5
Fastbreak	5/5
Breakthrough	7/12
Long dist.	1/1

Shooting statistics

Position	Goals	Sav.	Miss.	Post	Blk.	Total	%
Back (9m)	5	1	0	1	0	7	71
Line (6m)	4	0	0	0	0	4	100
Wing	0	2	0	0	0	2	0
7m penalties	9	2	0	1	0	12	75
Fastbreak	1	0	0	0	0	1	100
Breakthrough	6	3	0	0	0	9	67
Total	**25**	**8**	**0**	**2**	**0**	**35**	**71**

#	Jersey number	**Tot.**	Total shooting	**6m**	6m (line) shooting	**9m**	9m shooting	**Wng**	Wing shooting	**FB**	Fastbreak sh.	**7m**	7m penalty sh.
Brk.	Breakthrough sh.	**LD**	Long distance sh.	**As.**	Assists	**PC**	Pass clear chance	**E7**	Eearned 7m pen.	**TF**	Technical faults	**St.**	Steals
2m	2m punishments	**C7.**	Commited 7m	**E2**	Eearned 2m pun.	**YC.**	Yellow cards	**R/B**	Red/Blue cards	**Blk.**	Blocks	**S**	Starting Line-up

25th IHF Men's Junior World Championship 2025

Final Round, Quarterfinals

Match Team Statistics
Match No. 92

Germany 26 - 32 Sweden
(14 - 16) (12 - 16)

26.6.2025. 21:00
Attendance: 525
Arena Katowice

Referees: Cristian Lemes (URU) / Mathias Sosa (URU)

Sweden

Players			Goals / shots									Attack					Def.			Penalties				TP
#	Surname and name	S	Tot.	%	9m	6m	Wing	7m	FB	Brk.	LD	As.	PC	E7	E2	TF	St.	C7	Blk	YC	2m	R	B	
3	BORG Isak	S	4/4	100			3/3		1/1															30:48
6	MARTINSSON Noah	S	4/5	80			3/4		1/1															51:27
7	MANSSON Axel		9/15	60	3/7			5/5		1/3		1	1		1									31:43
9	HÄGGLUND JUNLER Albin																							
10	DURLANU Sebastian		2/2	100	1/1					1/1				1		3								14:40
14	ERIKSSON Elliot	S	2/3	67					1/1	0/1	1/1	2					1	2			1			46:41
15	BIEL NILSEN Isaac																							2:18
16	SKOOG Arvid	S																						52:48
18	BJÖRKMAN Marcus	S	1/1	100					1/1					1			2	2			3			45:52
19	SUNDEWALL Love																							
21	HOLMBERG SCHATZL Emil																							0:48
22	ULIANA STARCK Theodor	S	1/1	100		1/1											1	3			3			33:24
23	SEGERTOFT Pelle	S	3/5	60	0/1	1/1				2/3		4	1	3	2	1	2	4						53:12
24	JOHANNISSON Emil																				1			7:31
27	JOHANSSON Oscar		1/3	33	0/2				1/1			1					1							10:40
28	GUSTAVSSON Linus		5/11	45	0/4	2/3				3/4		7												38:08
	Team / bench																			1				
	TOTAL		32/50	64	4/15	4/5	6/7	5/5	5/5	7/12	1/1	15	2	5	3	4	7	11	0	1	8	0	0	

Goalkeepers		Saves / shots								
#.	Surname and name	Tot.	%	9m	6m	Wing	7m	FB	Brk.	LD
16	SKOOG Arvid	8/31	26	1/6	0/4	2/2	2/9	0/1	3/9	
21	HOLMBERG SCHATZL Emil	0/2	0				0/2			
	TOTAL	8/33	24	1/6	0/4	2/2	2/11	0/1	3/9	0/0

Coach: **Dennis Sandberg**

Number of attacks: 52, Efficiency: 62%, Average Duration: 37.38 seconds

Attack by type of defense

	Shots	9m	6m	Wing	TF	E7	E2
On def. 6-0	17/32	4/14	4/5	5/6	3	5	3
On def. 5-1	1/3	0/0	0/0	0/0	1	0	0
On def. press.	2/3	0/1	0/0	0/0	0	0	0
Fastbreak	5/5				0	0	0

Defense by type

	Total	9m	6m	Wing	Stl.	C7	2m
Def. 6-0	15/22	5/7	4/4	0/2	7	11	0
Fastbreak	1/1				0	0	8

Attack with superiority / minority / goalkeeper out

	Attack				Reaction		
	Att.	Eff.	Shots	TF	FB	LD	Tot.
7 on 6 (GK out)	5	60%	3/5	0	0/0	0/0	0/0
6 on 6 (GK out)	8	50%	4/7	1	0/0	1/1	1/1
6 on 6	29	59%	17/26	3			
7 on 5 (GK out)	2	100%	2/2	0	0/0	0/0	0/0
6 on 5 (GK out)	4	75%	3/4	0	0/0	0/0	0/0
6 on 5	3	67%	2/3	0			
6 on 4 (GK out)	1	100%	1/1	0	0/0	0/0	0/0

Player superiority / GK out counted at the end of attack (in case it changes during attack)

Defense with superiority / minority / goalkeeper out

	Attack				Reaction		
	Att.	Eff.	Shots	TF	FB	LD	Tot.
7 on 6 (GK out)	7	43%	3/4	3	1/1	0/0	1/1
7 on 5 (GK out)	3	33%	1/1	2	0/0	0/0	0/0
6 on 6 (GK out)	3	0%	0/0	3	1/1	0/0	1/1
6 on 5 (GK out)	5	80%	4/5	0	0/0	0/0	0/0
6 on 6	25	48%	12/19	6			
6 on 5	6	83%	5/6	0			
5 on 6	1	0%	0/0	1			
5 on 5	1	100%	1/1	0			

Numbers show attacking numbers of oponnent. Lower efficiency of oponnent means better defense of this team

#	Jersey number	**Tot.**	Total shooting	**6m**	6m (line) shooting	**9m**	9m shooting	**Wng**	Wing shooting	**FB**	Fastbreak sh.	**7m**	7m penalty sh.
Brk.	Breakthrough sh.	**LD**	Long distance sh.	**As.**	Assists	**PC**	Pass clear chance	**E7**	Eearned 7m pen.	**TF**	Technical faults	**St.**	Steals
2m	2m punishments	**C7.**	Commited 7m	**E2**	Eearned 2m pun.	**YC.**	Yellow cards	**R/B**	Red/Blue cards	**Blk.**	Blocks	**S**	Starting Line-up

25th IHF Men's Junior World Championship 2025

Final Round, Quarterfinals

Match Team Statistics
Match No. 92

Germany 26 - 32 Sweden
(14 - 16) (12 - 16)

26.6.2025. 21:00
Attendance: 525
Arena Katowice

Referees: Cristian Lemes (URU) / Mathias Sosa (URU)

Shot distribution by player

3 I. Borg

2/2		
2/2		

6 N. Martinsson

1/1		
		1/1
		2/2

1 post

7 A. Mansson

3/3		1/1
		2/3
2/2	0/1	1/1

3 post 1 miss.

9 A. Hägglund Junler

10 S. Durlanu

	1/1	
1/1		

14 E. Eriksson

1/1		
	1/1	0/1

15 I. Biel Nilsen

18 M. Björkman

	1/1	

19 L. Sundewall

22 T. Uliana Starck

1/1		

23 P. Segertoft

1/1		2/2
0/1		

1 block

24 E. Johannisson

27 O. Johansson

	0/1	1/1
	0/1	

28 L. Gustavsson

1/1		2/2
		1/1
		1/3

2 post 1 miss. 1 block

TOTAL

9/9	2/2	3/3
3/3	1/2	7/9
3/4	0/2	4/6

6 post 2 miss. 2 block

Saves distribution goalkeepers

16 A. Skoog

0/6		1/1
1/2	1/1	1/8
4/8		0/5

21 E. Holmberg Schatzl

0/2		

TOTAL

0/6		1/1
1/2	1/1	1/8
4/10		0/5

Shots by position

ATTACK

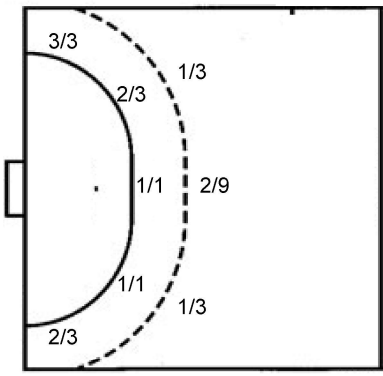

7m penalties	5/5
Fastbreak	5/5
Breakthrough	7/12
Long dist.	1/1

DEFENSE

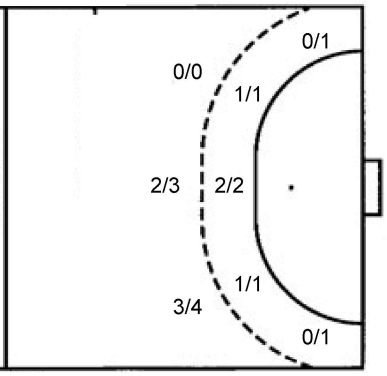

7m penalties	9/12
Fastbreak	1/1
Breakthrough	6/9
Long dist.	1/1

Shooting statistics

Position	Goals	Sav.	Miss.	Post	Blk.	Total	%
Back (9m)	4	5	1	3	2	15	27
Line (6m)	4	1	0	0	0	5	80
Wing	5	0	0	1	0	6	83
7m penalties	5	0	0	0	0	5	100
Fastbreak	5	0	0	0	0	5	100
Breakthrough	7	2	1	2	0	12	58
Total	**30**	**8**	**2**	**6**	**2**	**48**	**63**

#	Jersey number	**Tot.**	Total shooting	**6m**	6m (line) shooting	**9m**	9m shooting	**Wng**	Wing shooting	**FB**	Fastbreak sh.	**7m**	7m penalty sh.
Brk.	Breakthrough sh.	**LD**	Long distance sh.	**As.**	Assists	**PC**	Pass clear chance	**E7**	Earned 7m pen.	**TF**	Technical faults	**St.**	Steals
2m	2m punishments	**C7.**	Commited 7m	**E2**	Earned 2m pun.	**YC.**	Yellow cards	**R/B**	Red/Blue cards	**Blk.**	Blocks	**S**	Starting Line-up

25th IHF Men's Junior World Championship 2025

Final Round, Quarterfinals

Match Team Statistics

Match No. 92

Germany 26 - 32 Sweden

(14 - 16) (12 - 16)

26.6.2025. 21:00
Attendance: 525
Arena Katowice

Referees: Cristian Lemes (URU) / Mathias Sosa (URU)

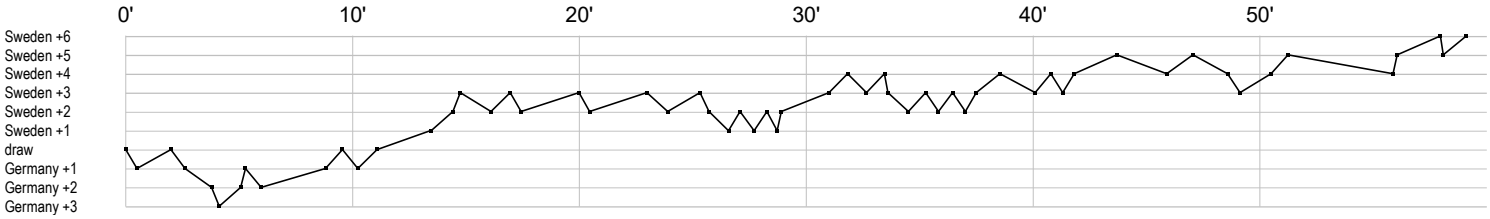

Germany

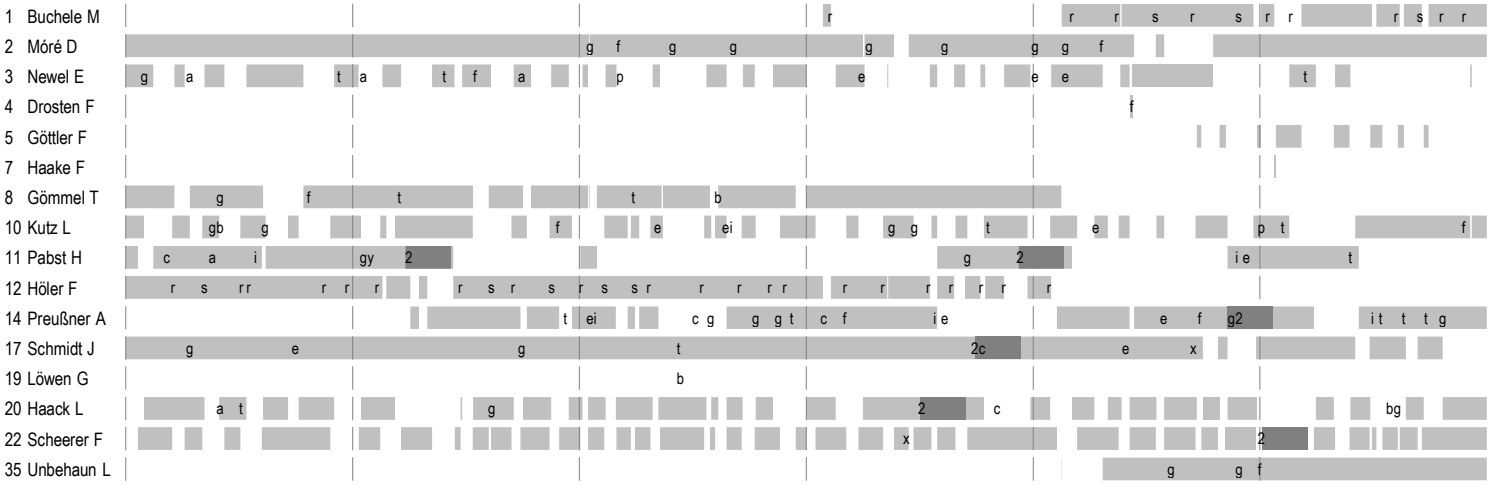

Sweden

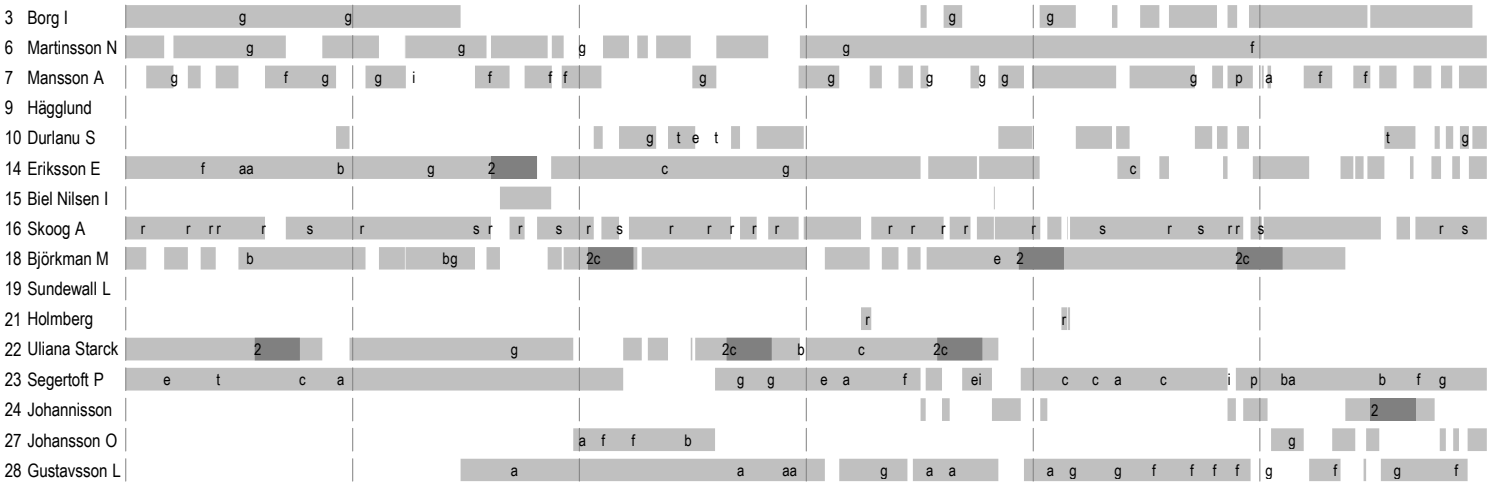

	In game	**g**	Goal scored	**f**	Missed shot	**a**	Assist	**t**	Technical faults	**b**	Steal
2	2min suspension	**e**	Eearned 7m	**c**	Commited 7m	**y**	Yellow card	**r**	Red Card	**k**	Blue card
i	Eearned 2min.	**x**	Block	**4**	4min suspension	**p**	Pass for clear chance	**s**	Saved shot	**r**	Received goal