2022 IHF Men's Super Globe

Saudi Arabia (Dammam)

Final Round, 3-4. place

Match Team Statistics

Match No. 23

Al Ahly 26 - 35 Lomza Industria K

(13 - 16) (13 - 19)

23.10.2022. 18:00
Attendance: 1800
Dammam Sports Hall

Referees: Robert Schulze (GER) / Tobias Tonnies (GER) / ()

Al Ahly

Players			Goals / shots									Attack					Def.			Penalties				TP
#	Surname and name	S	Tot.	%	9m	6m	Wing	7m	FB	Brk.	LD	As.	PC	E7	E2	TF	St.	C7	Blk	YC	2m	R	B	
1	HOMAYED Abdelrahman																							
5	MAHMOUD Mohsen	S	1/3	33	1/3							1				1								32:43
7	KHALIL Mostafa	S	2/4	50	1/3					1/1			1			3								40:52
8	MOHAMED Shebab Ahmed		1/1	100						1/1														25:57
9	EISSA Eslam		3/4	75	2/3					1/1		1		5										37:33
10	ABDOU Abd Elrahman		1/4	25	0/2					1/2		2		3	3	2					1			21:17
11	ASHOUR Abdelaziz	S																						38:57
16	SAYED Abd Elrahman																							
17	NASR ALLAH Ahmed		4/5	80				0/1		4/4		2	2	2	1	3								31:42
19	ALI DAHROUG Omar		4/6	67		0/1		3/4	1/1															12:35
24	EL MASRY Ibrahim	S										1					1	1	1					26:35
49	NANTES Raul		0/1	0	0/1																			2:34
72	ABDELWAHED Yasser	S	1/1	100		1/1										1								17:25
80	MESILHY Ahmed		5/7	71		3/5		2/2						1		2								28:57
97	AHMED Mohamed	S																						59:09
98	HASSAN Omar Khaled	S	4/6	67			2/2	2/4																43:44
	Team / bench															1								
	UKUPNO		26/42	62	4/12	4/7	2/2	7/11	1/1	8/9	0/0	7	3	11	4	13	1	1	1	0	1	0	0	

Goalkeepers		Saves / shots								
#.	Surname and name	Tot.	%	9m	6m	Wing	7m	FB	Brk.	LD
1	HOMAYED Abdelrahman									
16	SAYED Abd Elrahman									
97	AHMED Mohamed	9/44	20	4/13	2/12	0/3	0/1	2/5	1/10	
	TOTAL	9/44	20	4/13	2/12	0/3	0/1	2/5	1/10	0/0

Coach: **Ahmed Abouelela**

Number of attacks: 55, Efficiency: 47%, Average Duration: 38.62 seconds

Attack by type of defense

	Shots	9m	6m	Wing	TF	E7	E2
On def. 6-0	4/6	1/3	0/0	1/1	2	1	0
On def. 3-2-1	14/24	3/9	4/7	1/1	11	10	4
Fastbreak	1/1				0	0	0

Defense by type

	Total	9m	6m	Wing	Stl.	C7	2m
Def. 6-0	19/26	8/11	4/5	2/2	1	1	1
Def. 3-2-1	12/15	1/3	6/7	1/1	0	0	0
Fastbreak	3/5				0	0	0

Attack with superiority / minority / goalkeeper out

	Attack				Reaction		
	Att.	Eff.	Shots	TF	FB	LD	Tot.
6 on 6	46	48%	22/34	12			
6 on 5	8	50%	4/7	1			
5 on 6	1	0%	0/1	0			

Player superiority / GK out counted at the end of attack (in case it changes during attack)

Defense with superiority / minority / goalkeeper out

	Attack				Reaction		
	Att.	Eff.	Shots	TF	FB	LD	Tot.
7 on 6 (GK out)	2	50%	1/1	1	1/1	0/0	1/1
6 on 6 (GK out)	6	83%	5/5	1	0/0	0/0	0/0
6 on 6	44	64%	28/36	8			
6 on 5	2	50%	1/2	0			

Numbers show attacking numbers of oponnent. Lower efficiency of oponnent means better defense of this team

#	Jersey number	**Tot.**	Total shooting	**6m**	6m (line) shooting	**9m**	9m shooting	**Wng**	Wing shooting	**FB**	Fastbreak sh.	**7m**	7m penalty sh.
Brk.	Breakthrough sh.	**LD**	Long distance sh.	**As.**	Assists	**PC**	Pass clear chance	**E7**	Earned 7m pen.	**TF**	Technical faults	**St.**	Steals
2m	2m punishments	**C7.**	Commited 7m	**E2**	Earned 2m pun.	**YC.**	Yellow cards	**R/B**	Red/Blue cards	**Blk.**	Blocks	**S**	Starting Line-up

2022 IHF Men's Super Globe

Saudi Arabia (Dammam)

Final Round, 3-4. place

Match Team Statistics

Match No. 23

Al Ahly 26 - 35 Lomza Industria K

(13 - 16) (13 - 19)

23.10.2022. 18:00
Attendance: 1800
Dammam Sports Hall

Referees: Robert Schulze (GER) / Tobias Tonnies (GER) / ()

Shot distribution by player

5 M. Mahmoud

	1/1	
0/1		

1 miss.

7 M. Khalil

		1/1
1/1		
	0/1	

1 miss.

8 S. Mohamed

	1/1	

9 E. Eissa

		1/1
0/1		1/1
1/1		

10 A. Abdou

0/1		0/1
		1/1

1 miss.

11 A. Ashour

17 A. Nasr Allah

1/2		
1/1	1/1	

1/1 lob

19 O. Ali Dahroug

1/1		
0/1		0/1
	1/1	2/2

24 I. El Masry

49 R. Nantes

	0/1	

72 Y. Abdelwahed

1/1		

80 A. Mesilhy

	0/1	
		2/2
2/2	1/2	

98 O. Hassan

2/2		
		0/1
2/2	0/1	

TOTAL

4/5	1/2	2/2
1/5	0/1	3/6
7/7	4/7	3/3

3 miss. 1/1 lob

Saves distribution goalkeepers

1 A. Homayed

16 A. Sayed

97 M. Ahmed

0/2	1/4	0/2
0/1		6/6
1/15	0/2	1/10

TOTAL

0/2	1/4	0/2
0/1		6/6
1/15	0/2	1/10

Shots by position

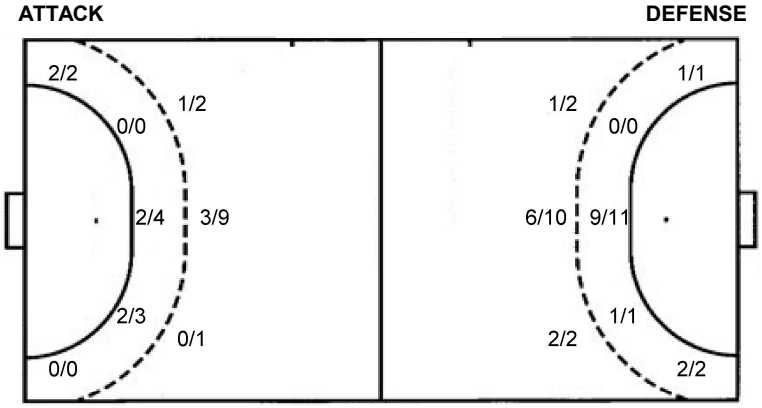

7m penalties	7/11	7m penalties	1/1
Fastbreak	1/1	Fastbreak	3/5
Breakthrough	8/9	Breakthrough	9/12
Long dist.	0/0	Long dist.	0/0

Shooting statistics

Position	Goals	Sav.	Miss.	Post	Blk.	Total	%
Back (9m)	4	5	3	0	0	12	33
Line (6m)	4	3	0	0	0	7	57
Wing	2	0	0	0	0	2	100
7m penalties	7	4	0	0	0	11	64
Fastbreak	1	0	0	0	0	1	100
Breakthrough	8	1	0	0	0	9	89
Total	**26**	**13**	**3**	**0**	**0**	**42**	**62**

#	Jersey number	**Tot.**	Total shooting	**6m**	6m (line) shooting	**9m**	9m shooting	**Wng**	Wing shooting	**FB**	Fastbreak sh.	**7m**	7m penalty sh.
Brk.	Breakthrough sh.	**LD**	Long distance sh.	**As.**	Assists	**PC**	Pass clear chance	**E7**	Earned 7m pen.	**TF**	Technical faults	**St.**	Steals
2m	2m punishments	**C7.**	Commited 7m	**E2**	Earned 2m pun.	**YC.**	Yellow cards	**R/B**	Red/Blue cards	**Blk.**	Blocks	**S**	Starting Line-up

2022 IHF Men's Super Globe

Saudi Arabia (Dammam)

Final Round, 3-4. place

Match Team Statistics

Match No. 23

Al Ahly 26 - 35 Lomza Industria K

(13 - 16) (13 - 19)

23.10.2022. 18:00
Attendance: 1800
Dammam Sports Hall

Referees: Robert Schulze (GER) / Tobias Tonnies (GER) / ()

Lomza Industria Kielce

Players			Goals / shots									Attack					Def.			Penalties				TP
#	Surname and name	S	Tot.	%	9m	6m	Wing	7m	FB	Brk.	LD	As.	PC	E7	E2	TF	St.	C7	Blk	YC	2m	R	B	
1	KORNECKI Mateusz	S																						18:50
4	SANCHEZ Miguel	S	1/2	50			1/1		0/1							1		1			1			32:20
5	OLEJNICZAK Michal		4/5	80	0/1					4/4		3	1			1		1			1			28:33
6	WIADERNY Szymon																	1						28:06
9	SICKO Szymon		4/6	67	2/3					2/3				1		3								6:30
10	DUJSHEBAEV Alex	S	2/2	100	2/2							4												31:58
11	TOURNAT Nicolas	S	8/9	89		7/8			1/1															29:16
18	KARAČIĆ Igor		1/1	100	1/1							3												16:28
23	MORYTO Arkadiusz	S	4/5	80		0/1	2/2	1/1	1/1			1	1											26:55
24	DUJSHEBAEV Daniel	S	1/4	25	0/2				0/1	1/1						1		1						35:10
25	THRASTARSON Haukur	S	1/1	100	1/1							4	1					1						30:19
29	REMILI Nedim		5/8	63	3/4					2/4		1				2		3			1			33:52
33	WOLFF Adreas																							37:45
48	GEBALA Tomasz																	2			1			34:10
50	KARALEK Artsem		4/4	100		3/3			1/1				1		1	2		1						29:48
	Team / bench																							
	UKUPNO		35/47	74	9/14	10/12	3/3	1/1	3/5	9/12	0/0	16	4	1	1	10	0	11	0	0	4	0	0	

Goalkeepers		Saves / shots								
#.	Surname and name	Tot.	%	9m	6m	Wing	7m	FB	Brk.	LD
1	KORNECKI Mateusz	2/13	15	1/3	1/4	0/1	0/3		0/2	
33	WOLFF Adreas	11/25	44	4/6	2/3	0/1	4/8		1/7	
	TOTAL	13/38	34	5/9	3/7	0/2	4/11	2/0	1/9	0/0

Coach: **Talant Dujshebaev**

Number of attacks: 54, Efficiency: 65%, Average Duration: 27.28 seconds

Attack by type of defense

	Shots	9m	6m	Wing	TF	E7	E2
On def. 6-0	19/26	8/11	4/5	2/2	6	1	1
On def. 3-2-1	12/15	1/3	6/7	1/1	4	0	0
Fastbreak	3/5				0	0	0

Defense by type

	Total	9m	6m	Wing	Stl.	C7	2m
Def. 6-0	4/6	1/3	0/0	1/1	0	1	0
Def. 3-2-1	14/24	3/9	4/7	1/1	0	10	4
Fastbreak	1/1				0	0	0

Attack with superiority / minority / goalkeeper out

	Attack				Reaction		
	Att.	Eff.	Shots	TF	FB	LD	Tot.
7 on 6 (GK out)	2	50%	1/1	1	1/1	0/0	1/1
6 on 6 (GK out)	6	83%	5/5	1	0/0	0/0	0/0
6 on 6	44	64%	28/36	8			
6 on 5	2	50%	1/2	0			

Player superiority / GK out counted at the end of attack (in case it changes during attack)

Defense with superiority / minority / goalkeeper out

	Attack				Reaction		
	Att.	Eff.	Shots	TF	FB	LD	Tot.
6 on 6	46	48%	22/34	12			
6 on 5	8	50%	4/7	1			
5 on 6	1	0%	0/1	0			

Numbers show attacking numbers of oponnent. Lower efficiency of oponnent means better defense of this team

#	Jersey number	**Tot.**	Total shooting	**6m**	6m (line) shooting	**9m**	9m shooting	**Wng**	Wing shooting	**FB**	Fastbreak sh.	**7m**	7m penalty sh.
Brk.	Breakthrough sh.	**LD**	Long distance sh.	**As.**	Assists	**PC**	Pass clear chance	**E7**	Eearned 7m pen.	**TF**	Technical faults	**St.**	Steals
2m	2m punishments	**C7.**	Commited 7m	**E2**	Eearned 2m pun.	**YC.**	Yellow cards	**R/B**	Red/Blue cards	**Blk.**	Blocks	**S**	Starting Line-up

2022 IHF Men's Super Globe

Saudi Arabia (Dammam)

Final Round, 3-4. place

Match Team Statistics

Match No. 23

Al Ahly 26 - 35 Lomza Industria K

(13 - 16) (13 - 19)

23.10.2022. 18:00
Attendance: 1800
Dammam Sports Hall

Referees: Robert Schulze (GER) / Tobias Tonnies (GER) / ()

Shot distribution by player

4 M. Sanchez

		0/1
		1/1

5 M. Olejniczak

1/1	1/1	1/1
1/1		

1 block

6 S. Wiaderny

9 S. Sicko

1/1		0/1
2/2		1/1

1 post

10 A. Dujshebaev

	1/1	
		1/1

11 N. Tournat

		0/1
5/5		3/3

18 I. Karačić

		1/1

23 A. Moryto

1/1	1/1	
2/2		0/1

24 D. Dujshebaev

		0/2
0/1	1/1	

25 H. Thrastarson

	1/1	

29 N. Remili

	0/1	
		0/1
2/2		2/2

1 post 1/1 lob

48 T. Gebala

50 A. Karalek

2/2		1/1

1/1 lob

TOTAL

2/2	3/4	2/2
1/1		0/6
14/15	2/2	9/10

2 post 1 block 2/2 lob

Saves distribution goalkeepers

1 M. Kornecki

0/1	1/2	0/2
1/2		0/2
0/3	0/1	

33 A. Wolff

1/4		
3/3	1/1	3/4
0/4	3/6	0/3

TOTAL

1/5	1/2	0/2
4/5	1/1	3/6
0/7	3/7	0/3

Shots by position

ATTACK

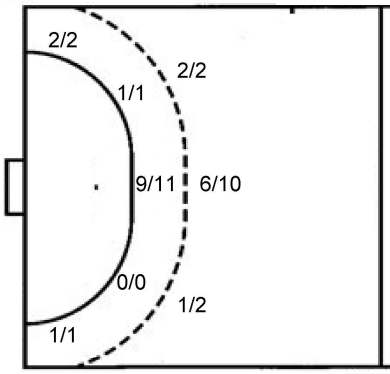

7m penalties	1/1
Fastbreak	3/5
Breakthrough	9/12
Long dist.	0/0

DEFENSE

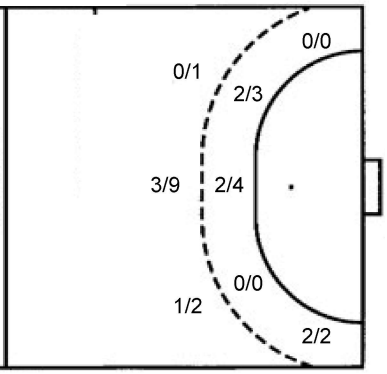

7m penalties	7/11
Fastbreak	1/1
Breakthrough	8/9
Long dist.	0/0

Shooting statistics

Position	Goals	Sav.	Miss.	Post	Blk.	Total	%
Back (9m)	9	4	0	0	1	14	64
Line (6m)	10	2	0	0	0	12	83
Wing	3	0	0	0	0	3	100
7m penalties	1	0	0	0	0	1	100
Fastbreak	3	2	0	0	0	5	60
Breakthrough	9	1	0	2	0	12	75
Total	**35**	**9**	**0**	**2**	**1**	**47**	**74**

#	Jersey number	**Tot.**	Total shooting	**6m**	6m (line) shooting	**9m**	9m shooting	**Wng**	Wing shooting	**FB**	Fastbreak sh.	**7m**	7m penalty sh.
Brk.	Breakthrough sh.	**LD**	Long distance sh.	**As.**	Assists	**PC**	Pass clear chance	**E7**	Earned 7m pen.	**TF**	Technical faults	**St.**	Steals
2m	2m punishments	**C7.**	Commited 7m	**E2**	Earned 2m pun.	**YC.**	Yellow cards	**R/B**	Red/Blue cards	**Blk.**	Blocks	**S**	Starting Line-up

2022 IHF Men's Super Globe

Saudi Arabia (Dammam)

Final Round, 3-4. place

Match Team Statistics

Match No. 23

Al Ahly 26 - 35 Lomza Industria K

(13 - 16) (13 - 19)

23.10.2022. 18:00
Attendance: 1800
Dammam Sports Hall

Referees: Robert Schulze (GER) / Tobias Tonnies (GER) / ()

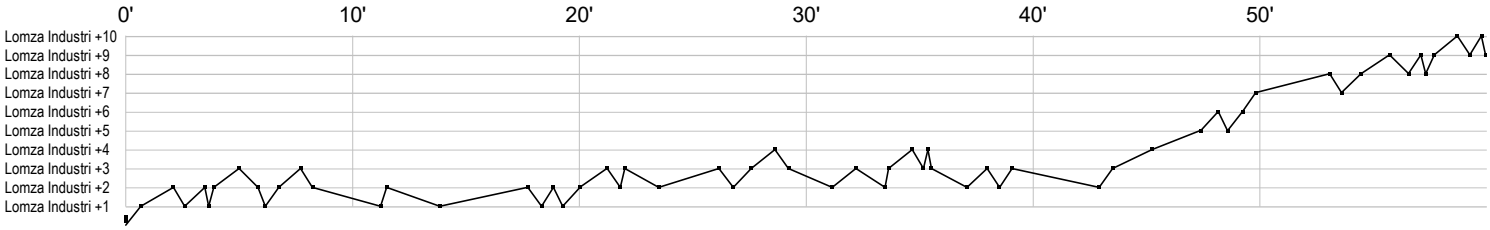

Al Ahly

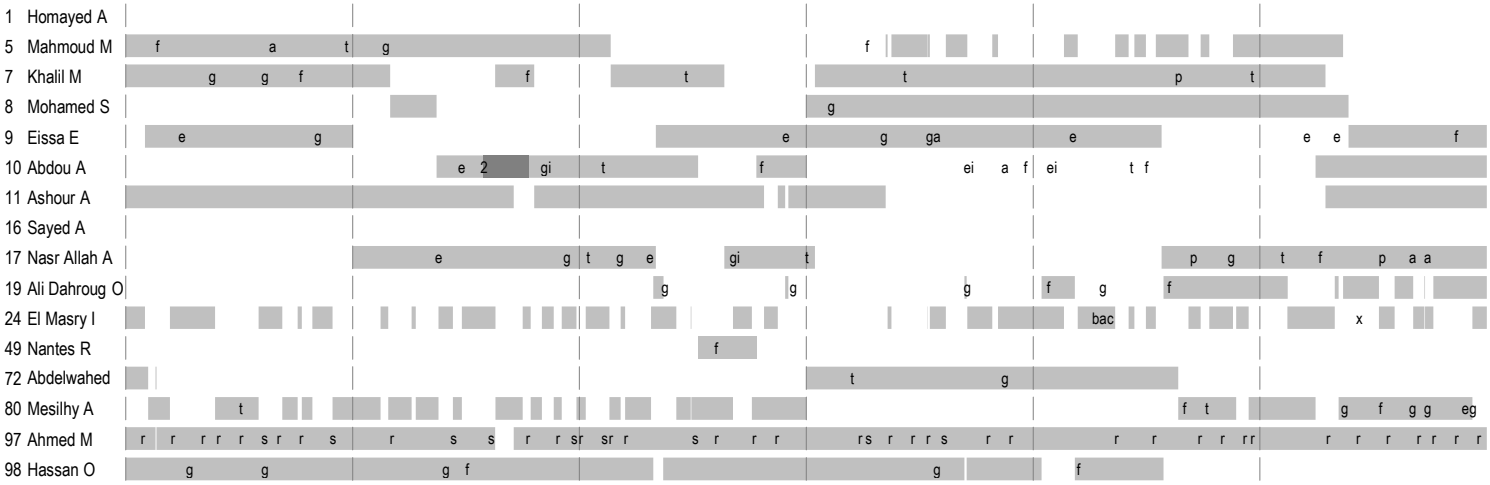

Lomza Industria Kielce

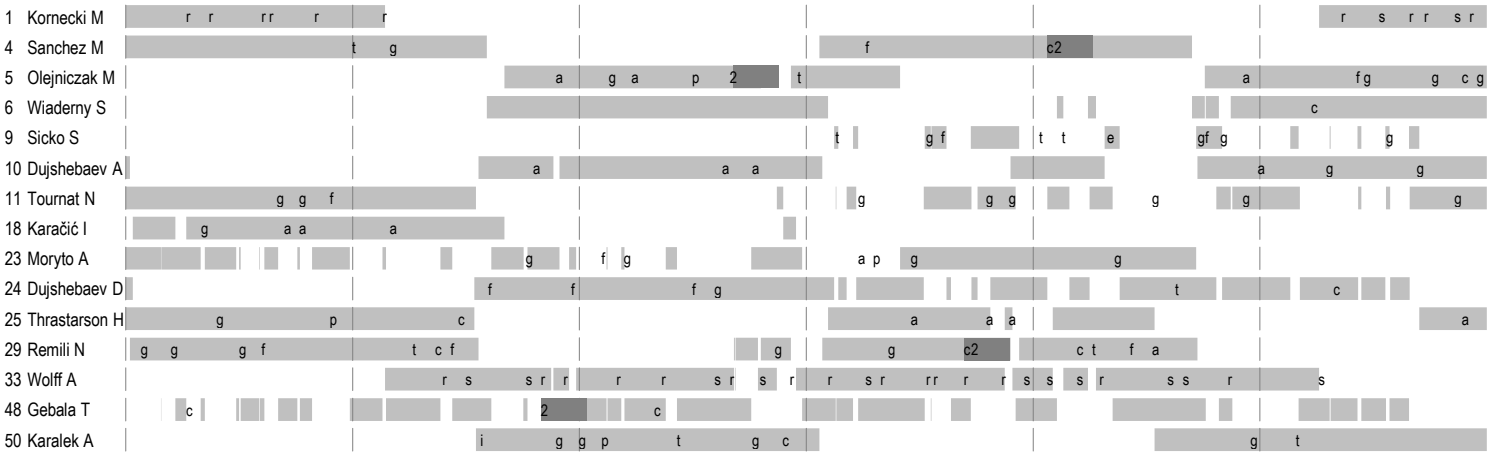

	In game	**g**	Goal scored	**f**	Missed shot	**a**	Assist	**t**	Technical faults	**b**	Steal
2	2min suspension	**e**	Eearned 7m	**c**	Commited 7m	**y**	Yellow card	**r**	Red Card	**k**	Blue card
i	Eearned 2min.	**x**	Block	**4**	4min suspension	**p**	Pass for clear chance	**s**	Saved shot	**r**	Received goal