2022 IHF Men's Super Globe

Saudi Arabia (Dammam)

Final Round, 5-8. place

Match Team Statistics

Match No. 15

Al-Khaleej 35 - 32 SL Benfica

(15 - 16) (20 - 16)

22.10.2022. 13:30
Attendance: 3500
Dammam Sports Hall

Referees: Jesper Madsen (DEN) / Mads Hansen (DEN) / ()

Al-Khaleej

Players			Goals / shots									Attack					Def.			Penalties				TP
#	Surname and name	S	Tot.	%	9m	6m	Wing	7m	FB	Brk.	LD	As.	PC	E7	E2	TF	St.	C7	Blk	YC	2m	R	B	
1	ALMOHSIN Sadiq																							0:38
2	ALIMESKEEN Mohamed		0/2	0		0/1	0/1																	14:20
3	ALI IBRAHIM Ali	S	1/1	100		1/1								1				1						33:58
5	JAFFAL Jawad																							1:33
7	ALMASKEEN Mohammad																							
16	ALSALEM Mohammad																							0:37
19	ALI Mohamed		2/2	100		2/2						1				2	1				1			41:43
20	ABOALRAHA Majed Alawi	S	2/2	100			1/1		1/1															31:36
23	ALBASHA Mohammed																							
31	MLADENOVIC Nemanja	S	4/5	80	3/3					1/2				1					2					39:18
34	ALSAIHATI Mansour																							
42	KADDAH Hassan	S	14/19	74	4/8			3/3	1/1	6/7		1		3		4	3	1						49:50
59	AL TURAIKI Hassan	S	1/1	100			1/1																	53:14
66	ELAHMAR Ahmed		7/10	70	3/5			1/2	3/3			4	1			4	1							43:17
88	HENDAWY Karim	S										1												58:22
99	AL SAYYAD Hussain	S	4/6	67	2/4	1/1				1/1		4	1			1	1	2						51:34
	Team / bench																							
	UKUPNO		35/48	73	12/20	4/5	2/3	4/5	5/5	8/10	0/0	11	2	5	0	11	6	4	2	0	1	0	0	

Goalkeepers		Saves / shots								
#.	Surname and name	Tot.	%	9m	6m	Wing	7m	FB	Brk.	LD
16	ALSALEM Mohammad	0/2	0				0/2			
19	ALI Mohamed									
88	HENDAWY Karim	9/38	24	2/11	2/7	1/4	0/2	2/8	2/6	
	TOTAL	9/40	23	2/11	2/7	1/4	0/4	2/8	2/6	0/0

Coach: **Dimitrios Dimitroulais**

Number of attacks: 55, Efficiency: 64%, Average Duration: 39.04 seconds

Attack by type of defense

	Shots	9m	6m	Wing	TF	E7	E2
On def. 6-0	22/32	11/18	3/4	1/1	10	5	0
On def. 5-1	3/4	1/1	0/0	1/2	1	0	0
On def. 3-3	1/2	0/1	1/1	0/0	0	0	0
Fastbreak	5/5				0	0	0

Defense by type

	Total	9m	6m	Wing	Stl.	C7	2m
Def. 6-0	21/33	9/14	5/7	3/5	6	4	1
Fastbreak	6/8				0	0	0

Attack with superiority / minority / goalkeeper out

	Attack				Reaction		
	Att.	Eff.	Shots	TF	FB	LD	Tot.
7 on 6 (GK out)	1	100%	1/1	0	0/0	0/0	0/0
6 on 5 (GK out)	2	50%	1/1	1	0/0	1/1	1/1
6 on 6	51	65%	33/42	9			
5 on 5	1	0%	0/0	1			

Player superiority / GK out counted at the end of attack (in case it changes during attack)

Defense with superiority / minority / goalkeeper out

	Attack				Reaction		
	Att.	Eff.	Shots	TF	FB	LD	Tot.
6 on 6 (GK out)	1	100%	1/1	0	0/0	0/0	0/0
6 on 6	51	57%	29/38	13			
6 on 5	1	0%	0/1	0			
5 on 5	2	100%	2/2	0			

Numbers show attacking numbers of oponnent. Lower efficiency of oponnent means better defense of this team

#	Jersey number	**Tot.**	Total shooting	**6m**	6m (line) shooting	**9m**	9m shooting	**Wng**	Wing shooting	**FB**	Fastbreak sh.	**7m**	7m penalty sh.
Brk.	Breakthrough sh.	**LD**	Long distance sh.	**As.**	Assists	**PC**	Pass clear chance	**E7**	Earned 7m pen.	**TF**	Technical faults	**St.**	Steals
2m	2m punishments	**C7.**	Commited 7m	**E2**	Earned 2m pun.	**YC.**	Yellow cards	**R/B**	Red/Blue cards	**Blk.**	Blocks	**S**	Starting Line-up

2022 IHF Men's Super Globe

Saudi Arabia (Dammam)

Final Round, 5-8. place

Match Team Statistics

Match No. 15

Al-Khaleej 35 - 32 SL Benfica

(15 - 16) (20 - 16)

22.10.2022. 13:30
Attendance: 3500
Dammam Sports Hall

Referees: Jesper Madsen (DEN) / Mads Hansen (DEN) / ()

Shot distribution by player

1 S. Almohsin			2 M. Alimeskeen			3 A. Ali Ibrahim			5 J. Jaffal			7 M. Almaskeen			20 M. Aboalraha			23 M. Albasha		
					0/1												1/1			
								1/1									1/1			
			1 miss.																	

31 N. Mladenovic			34 M. Alsaihati			42 H. Kaddah			59 H. Al Turaiki			66 A. Elahmar			99 H. Al Sayyad			TOTAL		
						1/1	1/2	1/1										1/1	1/2	1/1
1/1		1/1				3/3		2/2						3/4	2/2			6/6		7/9
		2/2				3/3	1/1	2/2	1/1			2/2		2/2			2/2	6/6	1/1	10/10
1 post						3 miss. 1 block						1 post 1 block			2 block			2 post 4 miss. 4 block		

Saves distribution goalkeepers

16 M. Alsalem			19 M. Ali			88 K. Hendawy			TOTAL		
						0/3		1/4	0/3		1/4
		0/1				5/9	1/2	0/3	5/9	1/2	0/4
0/1						1/8	1/5	0/5	1/9	1/5	0/5

Shots by position

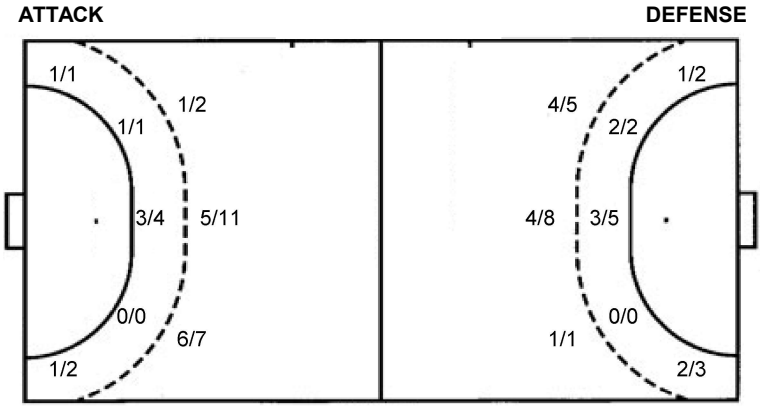

7m penalties	4/5	7m penalties	4/4
Fastbreak	5/5	Fastbreak	6/8
Breakthrough	8/10	Breakthrough	4/7
Long dist.	0/0	Long dist.	1/1

Shooting statistics

Position	Goals	Sav.	Miss.	Post	Blk.	Total	%
Back (9m)	12	1	2	1	4	20	60
Line (6m)	4	1	0	0	0	5	80
Wing	2	0	1	0	0	3	67
7m penalties	4	1	0	0	0	5	80
Fastbreak	5	0	0	0	0	5	100
Breakthrough	8	0	1	1	0	10	80
Total	**35**	**3**	**4**	**2**	**4**	**48**	**73**

#	Jersey number	**Tot.**	Total shooting	**6m**	6m (line) shooting	**9m**	9m shooting	**Wng**	Wing shooting	**FB**	Fastbreak sh.	**7m**	7m penalty sh.
Brk.	Breakthrough sh.	**LD**	Long distance sh.	**As.**	Assists	**PC**	Pass clear chance	**E7**	Eearned 7m pen.	**TF**	Technical faults	**St.**	Steals
2m	2m punishments	**C7.**	Commited 7m	**E2**	Eearned 2m pun.	**YC.**	Yellow cards	**R/B**	Red/Blue cards	**Blk.**	Blocks	**S**	Starting Line-up

2022 IHF Men's Super Globe

Saudi Arabia (Dammam)

Final Round, 5-8. place

Match Team Statistics

Match No. 15

Al-Khaleej 35 - 32 SL Benfica

(15 - 16) (20 - 16)

22.10.2022. 13:30
Attendance: 3500
Dammam Sports Hall

Referees: Jesper Madsen (DEN) / Mads Hansen (DEN) / ()

SL Benfica

Players			Goals / shots									Attack					Def.			Penalties				TP
#	Surname and name	S	Tot.	%	9m	6m	Wing	7m	FB	Brk.	LD	As.	PC	E7	E2	TF	St.	C7	Blk	YC	2m	R	B	
7	JUHASZ Adam		0/1	0						0/1						1								11:09
8	KALLMAN Jonas	S	2/3	67			1/2		1/1									1						47:26
11	MOREIRA Belone	S	4/5	80	1/2				2/2	1/1		2				7								33:20
13	MORENO Paulo	S	3/4	75		3/4								1	1	1			1		1			30:43
19	MARTINS Carlos																							
22	BORGES Alexis		1/2	50		1/2						1		1		1			2					37:56
23	RAHMEL Ole	S	5/7	71		1/1	2/3		1/2		1/1						1							39:59
24	IZQUIERDO Ander		4/4	100	2/2					2/2		2				3								46:35
25	HERNANDEZ Sergey	S																						31:07
27	BINGO Arnaut																							9:41
28	SEMEDO Leandro	S										1						2	1					24:18
33	KLJUN Tadej		1/3	33					0/1	1/2				2				1						25:34
34	SILVA Jose		4/5	80	2/2				2/2	0/1			1				1	1						17:08
41	CAPDEVILLE Gustavo																							28:35
44	DJORDJIC Petar	S	8/12	67	4/8			4/4				3												36:29
99	CABRAL Guilherme																							
	Team / bench																							
	UKUPNO		32/46	70	9/14	5/7	3/5	4/4	6/8	4/7	1/1	9	1	4	1	13	2	5	4	0	1	0	0	

Goalkeepers		Saves / shots								
#.	Surname and name	Tot.	%	9m	6m	Wing	7m	FB	Brk.	LD
25	HERNANDEZ Sergey	1/22	5	1/9	0/2	0/2	0/2	0/3	0/4	
41	CAPDEVILLE Gustavo	2/16	13	0/4	1/3		1/3	0/2	0/4	
	TOTAL	3/38	8	1/13	1/5	0/2	1/5	2/5	0/8	0/0

Coach: **Jose Vaquero**

Number of attacks: 55, Efficiency: 58%, Average Duration: 26.75 seconds

Attack by type of defense

	Shots	9m	6m	Wing	TF	E7	E2
On def. 6-0	21/33	9/14	5/7	3/5	13	4	1
Fastbreak	6/8				0	0	0

Defense by type

	Total	9m	6m	Wing	Stl.	C7	2m
Def. 6-0	22/32	11/18	3/4	1/1	2	5	1
Def. 5-1	3/4	1/1	0/0	1/2	0	0	0
Def. 3-3	1/2	0/1	1/1	0/0	0	0	0
Fastbreak	5/5				0	0	0

Attack with superiority / minority / goalkeeper out

	Attack				Reaction		
	Att.	Eff.	Shots	TF	FB	LD	Tot.
6 on 6 (GK out)	1	100%	1/1	0	0/0	0/0	0/0
6 on 6	51	57%	29/38	13			
6 on 5	1	0%	0/1	0			
5 on 5	2	100%	2/2	0			

Player superiority / GK out counted at the end of attack (in case it changes during attack)

Defense with superiority / minority / goalkeeper out

	Attack				Reaction		
	Att.	Eff.	Shots	TF	FB	LD	Tot.
7 on 6 (GK out)	1	100%	1/1	0	0/0	0/0	0/0
6 on 5 (GK out)	2	50%	1/1	1	0/0	1/1	1/1
6 on 6	51	65%	33/42	9			
5 on 5	1	0%	0/0	1			

Numbers show attacking numbers of oponnent. Lower efficiency of oponnent means better defense of this team

#	Jersey number	**Tot.**	Total shooting	**6m**	6m (line) shooting	**9m**	9m shooting	**Wng**	Wing shooting	**FB**	Fastbreak sh.	**7m**	7m penalty sh.
Brk.	Breakthrough sh.	**LD**	Long distance sh.	**As.**	Assists	**PC**	Pass clear chance	**E7**	Eearned 7m pen.	**TF**	Technical faults	**St.**	Steals
2m	2m punishments	**C7.**	Commited 7m	**E2**	Eearned 2m pun.	**YC.**	Yellow cards	**R/B**	Red/Blue cards	**Blk.**	Blocks	**S**	Starting Line-up

2022 IHF Men's Super Globe

Saudi Arabia (Dammam)

Final Round, 5-8. place

Match Team Statistics

Match No. 15

Al-Khaleej 35 - 32 SL Benfica

(15 - 16) (20 - 16)

22.10.2022. 13:30
Attendance: 3500
Dammam Sports Hall

Referees: Jesper Madsen (DEN) / Mads Hansen (DEN) / ()

Shot distribution by player

7 A. Juhasz

1 miss.

8 J. Kallman

		1/1
0/1		
1/1		

11 B. Moreira

	0/1	2/2
	1/1	1/1

13 P. Moreno

		1/1
0/1		
1/1		1/1

19 C. Martins

22 A. Borges

1/1		
	0/1	

23 O. Rahmel

1/1		0/1
	1/1	
2/2		1/1

1 miss.

24 A. Izquierdo

		1/1
1/1		
2/2		

27 A. Bingo

28 L. Semedo

33 T. Kljun

1/3		

34 J. Silva

1/2		1/1
	1/1	1/1

44 P. Djordjic

1/1		
1/1		1/1
2/3	2/2	1/1

1 miss. 2 block

99 G. Cabral

TOTAL

3/3		3/4
4/9	1/2	4/4
8/9	4/5	5/5

3 miss. 2 block

Saves distribution goalkeepers

25 S. Hernandez

0/1	1/1	0/1
0/3		0/4
0/4	0/1	0/7

41 G. Capdeville

	0/1	
0/3		2/6
0/2		0/4

TOTAL

0/1	1/2	0/1
0/6		2/10
0/6	0/1	0/11

Shots by position

ATTACK

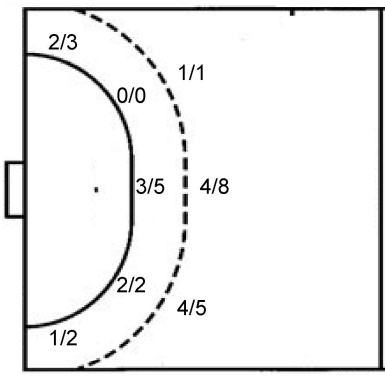

7m penalties	4/4
Fastbreak	6/8
Breakthrough	4/7
Long dist.	1/1

DEFENSE

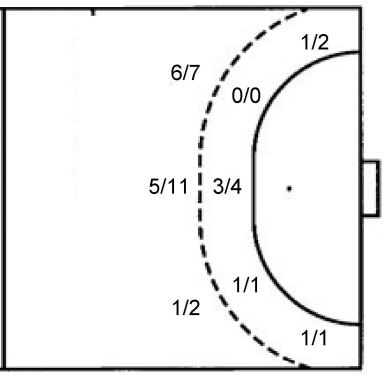

7m penalties	4/5
Fastbreak	5/5
Breakthrough	8/10
Long dist.	0/0

Shooting statistics

Position	Goals	Sav.	Miss.	Post	Blk.	Total	%
Back (9m)	9	2	1	0	2	14	64
Line (6m)	5	2	0	0	0	7	71
Wing	3	1	1	0	0	5	60
7m penalties	4	0	0	0	0	4	100
Fastbreak	6	2	0	0	0	8	75
Breakthrough	4	2	1	0	0	7	57
Total	**31**	**9**	**3**	**0**	**2**	**45**	**69**

#	Jersey number	**Tot.**	Total shooting	**6m**	6m (line) shooting	**9m**	9m shooting	**Wng**	Wing shooting	**FB**	Fastbreak sh.	**7m**	7m penalty sh.
Brk.	Breakthrough sh.	**LD**	Long distance sh.	**As.**	Assists	**PC**	Pass clear chance	**E7**	Eearned 7m pen.	**TF**	Technical faults	**St.**	Steals
2m	2m punishments	**C7.**	Commited 7m	**E2**	Eearned 2m pun.	**YC.**	Yellow cards	**R/B**	Red/Blue cards	**Blk.**	Blocks	**S**	Starting Line-up

2022 IHF Men's Super Globe

Saudi Arabia (Dammam)

Final Round, 5-8. place

Match Team Statistics

Match No. 15

Al-Khaleej 35 - 32 SL Benfica

(15 - 16) (20 - 16)

22.10.2022. 13:30
Attendance: 3500
Dammam Sports Hall

Referees: Jesper Madsen (DEN) / Mads Hansen (DEN) / ()

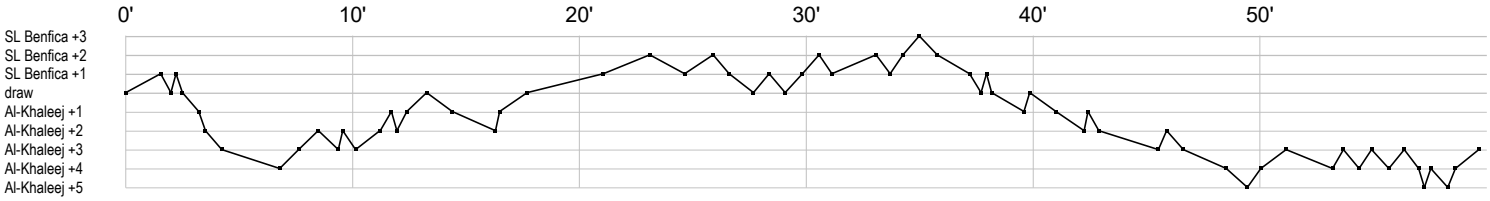

Al-Khaleej

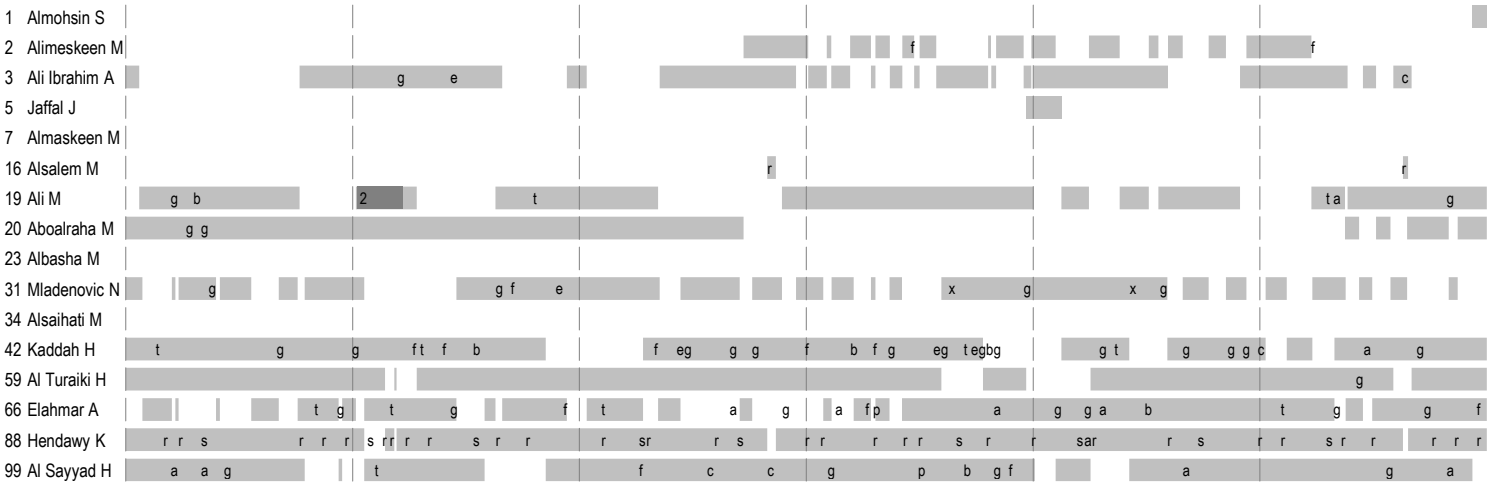

SL Benfica

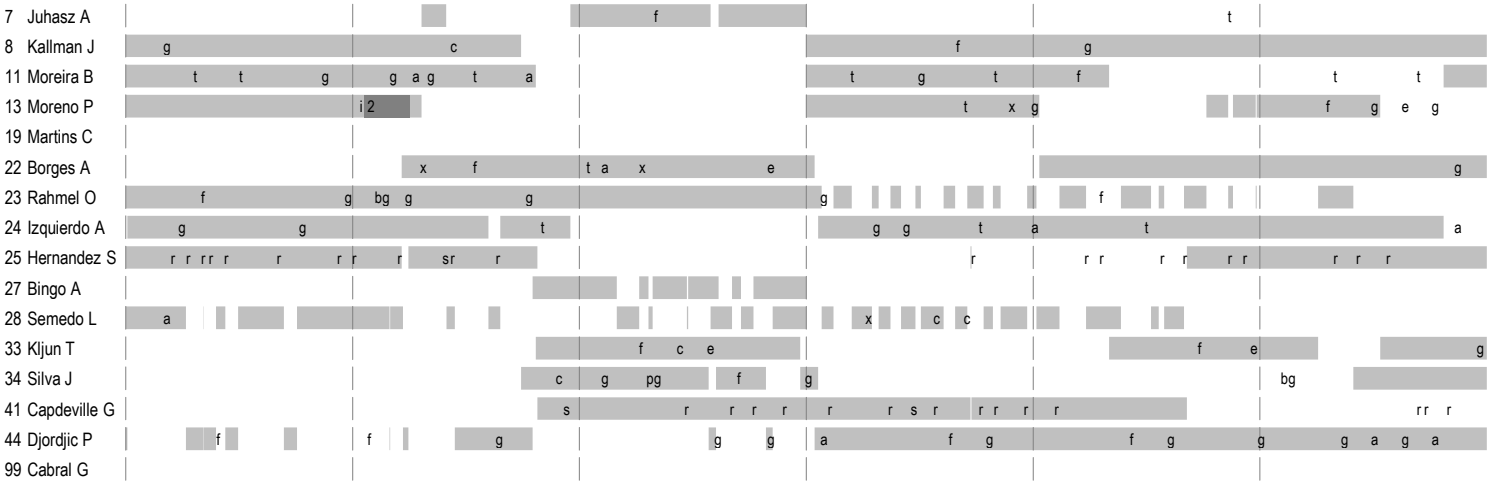

	In game	**g**	Goal scored	**f**	Missed shot	**a**	Assist	**t**	Technical faults	**b**	Steal
2	2min suspension	**e**	Eearned 7m	**c**	Commited 7m	**y**	Yellow card	**r**	Red Card	**k**	Blue card
i	Eearned 2min.	**x**	Block	**4**	4min suspension	**p**	Pass for clear chance	**s**	Saved shot	**r**	Received goal